HEARTLAND CORRIDOR

September 2009

1

Heartland Corridor Route

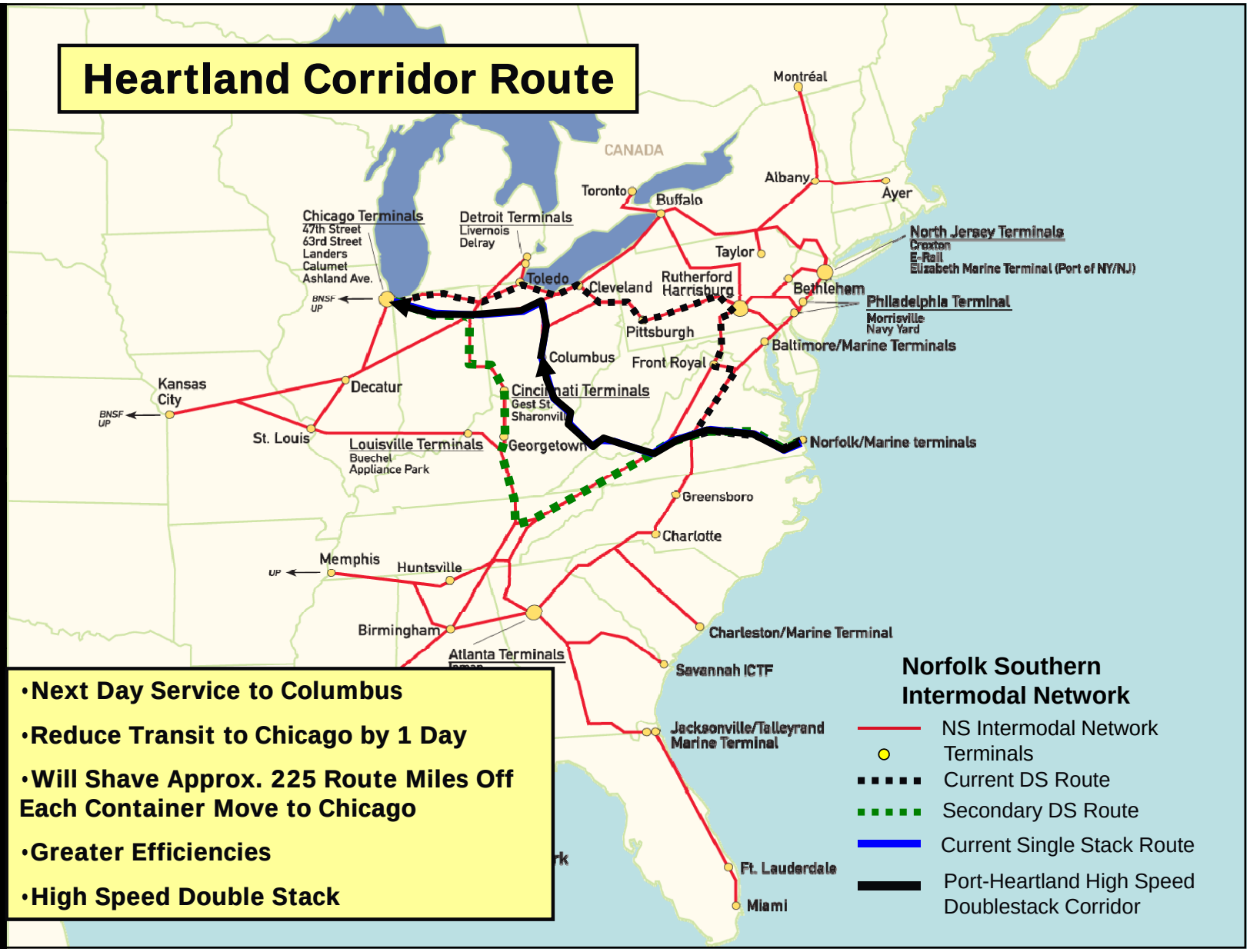

- **Next Day Service to Columbus**
- **Reduce Transit to Chicago by 1 Day**
- **Will Shave Approx. 225 Route Miles Off Each Container Move to Chicago**
- **Greater Efficiencies**
- **High Speed Double Stack**

Project Overview

- 28 Tunnels included (4-VA, 1-KY, 23-WV) - 29 lined
- 28,545 ft. (5.4 mi) needed cleared
- 7 Through Truss Modifications
- 1 Overhead Bridge required track shifting
- 1 Overhead Bridge will be removed
- 4 Signal Replacements
- Slide Fence Modifications at 8 locations

	Original Estimate	11/08 Projection	05/09 Projection
Federal	$ 80,450,000	$ 83,368,331	$ 83,368,331
Ohio	$ 836,355	$ 836,355	$ 836,355
Virginia	$ 9,750,000	$ 9,750,000	$ 9,750,000
NS	$ 60,106,583	$100,995,663	$ 98,395,663
Total	$151,142,938	$194,165,150	$191,565,150

4

Public Partners

Eastern Federal Lands Highway Division
US Department of Transportation - Federal Highway Administration

VDOT
Virginia Department of Transportation

STATE OF WEST VIRGINIA DEPARTMENT OF TRANSPORTATION

STATE OF OHIO DEPARTMENT OF TRANSPORTATION

HEARTLAND TUNNEL STATUS

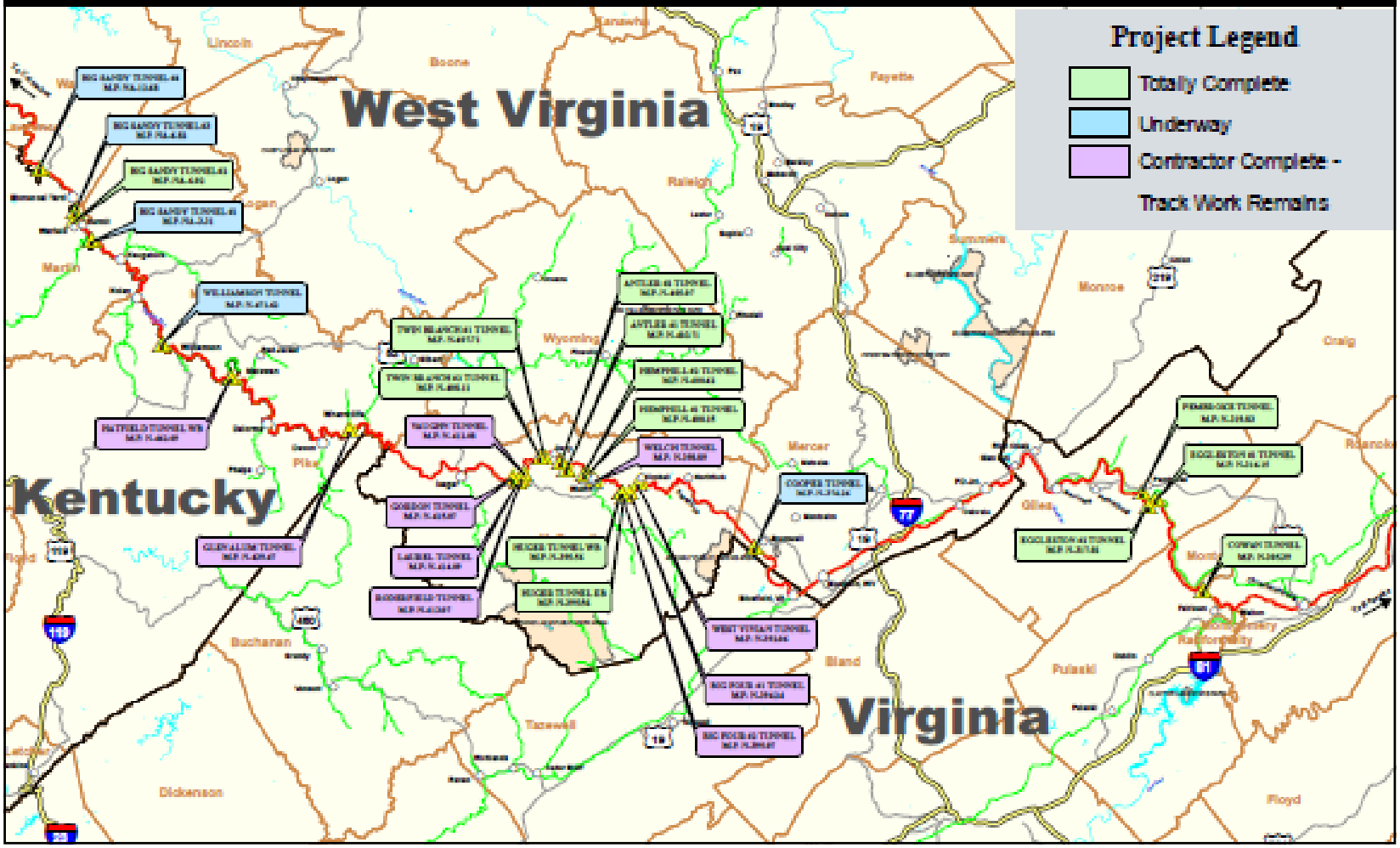
Project Legend
Totally Complete
Underway
Contractor Complete - Track Work Remains
West Virginia
Kentucky
Virginia
Lincoln
Boone
Raleigh
Fayette
Summers
Monroe
Craig
Wyoming
Mercer
Pike
Buchanan
Tazewell
Bland
Pulaski
Dickenson
Floyd
Roanoke
Montgomery
Radford City
Roanoke City
Olles
Marion
Logan
Mingo
Lawrence
Martin
Bell
Harlan
Knott
Perry
Letcher
Pike
Floyd
Johnson
Magoffin
Wolfe
Menifee
Powell
Lee
Wise
Russell
Scott
Washington
Smyth
Bristol
Grayson
Carroll
Wythe
Bedford
Franklin
Pittsylvania
Halifax
Mecklenburg
Charlotte
Lunenburg
Nottoway
Amelia
Prince Edward
Cumberland
Buckingham
Appomattox
Campbell
Bedford
Amherst
Nelson
Rockbridge
Bath
Highland
Pocahontas
Greenbrier
Nicholas
Fayette
Raleigh
Mercer
Summers
Monroe
Craig
Roanoke
Montgomery
Radford City
Roanoke City
Olles
Pulaski
Bland
Floyd
Tazewell
Buchanan
Dickenson
Pike
Wyoming
Mingo
Logan
Boone
Lincoln
Martin
Harlan
Bell

- Concrete vs. Masonry vs. Unlined

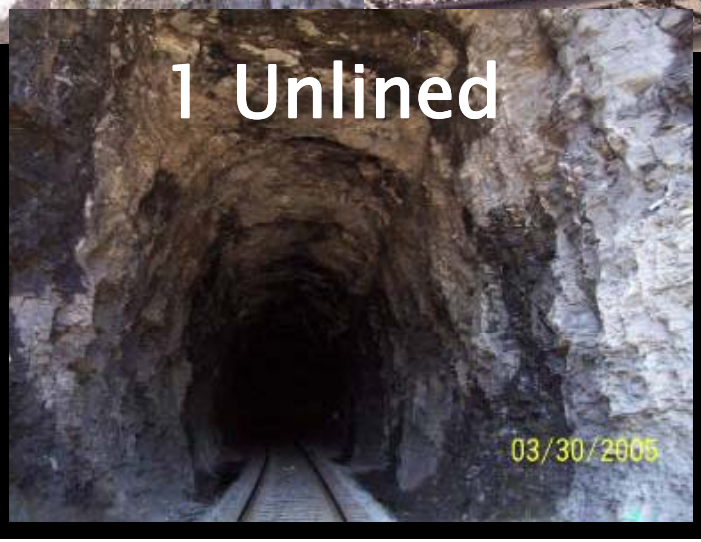

11 Single Track

17 Double Track
03/24/2005

Design Engineering Team

Hatch Mott MacDonald

HDR

RALPH WHITEHEAD ASSOCIATES, INC.
CONSULTING ENGINEERS
ENGINEERING SUCCESS

Anderson & Associates
Professional Design Services

Fuller Mossbarger Scott & May
FMSM
ENGINEERS

Construction Management Team

STV/Ralph Whitehead Associates

JACOBS ASSOCIATES

amec

Anderson & Associates
Professional Design Services

Design Considerations

- Safety of work
- Maintenance of rail traffic
- Ability to clear at end of shift
- Durability of final product

Design Considerations

- Extent of Encroachment

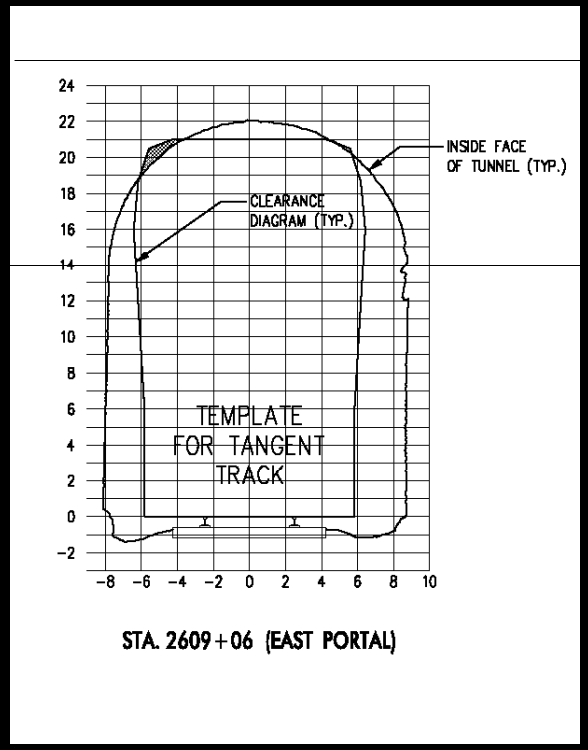

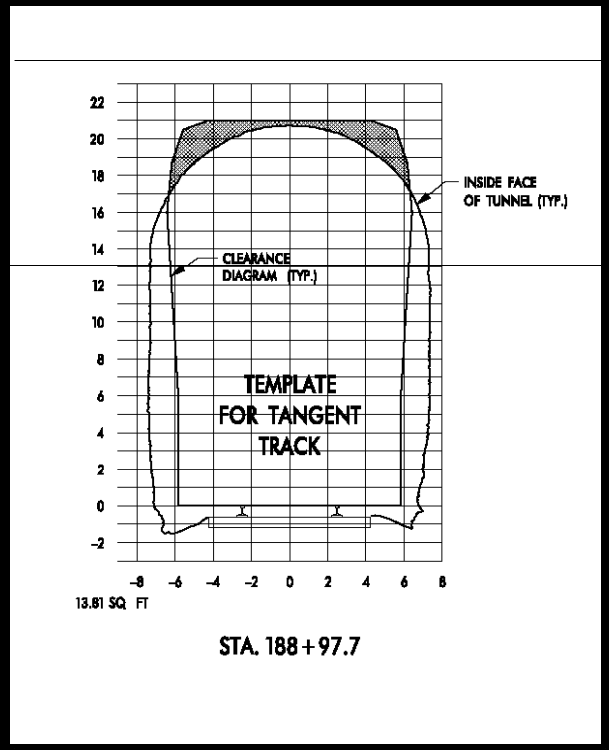

Design Conditions

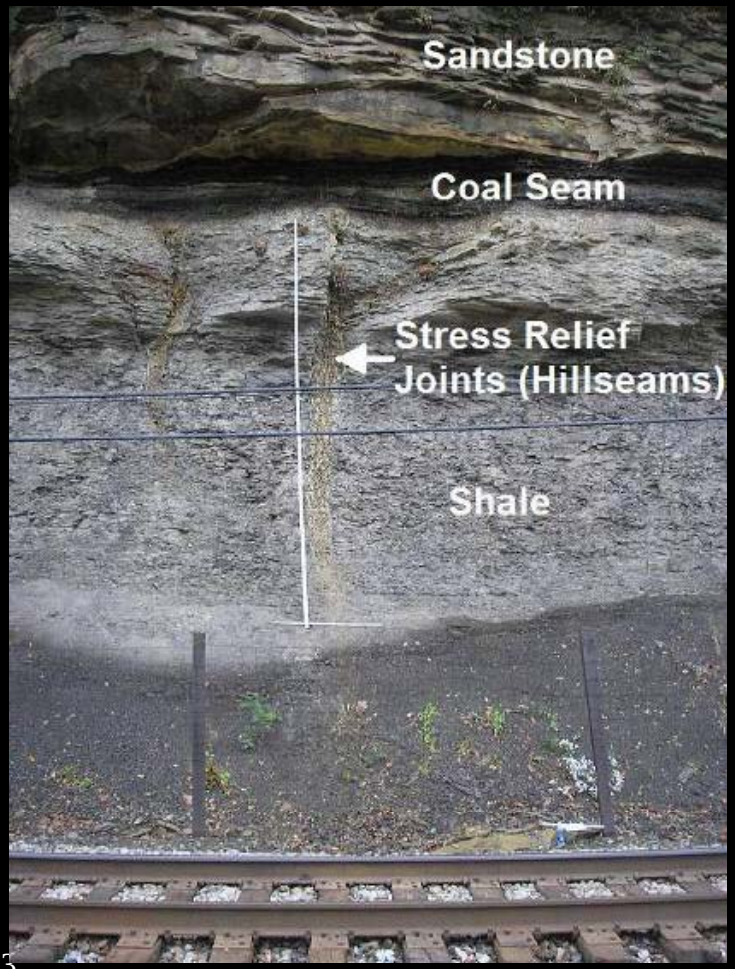

- Geotechnical Parameters

Project Status – Complete

1. Cowan Tunnel – Johnson Western Gunite (JWG) & NS Forces
2. Eggleston No. 1 Tunnel – NS Forces
3. Eggleston No. 2 Tunnel – NS Forces
4. Pembroke Tunnel – NS Forces
5. Slide Fence MP N-351.95 – NS Forces
6. Through Truss Bridge N-378.64 – LC Whitford

Project Status – Complete

7. Slide Fence MP N-379.9 – NS Forces
8. Signal – MP N-379.92 – NS Forces
9. Signal – MP N-387.15 – NS Forces
10. Signal – MP N-388.47 – NS Forces
11. Huger Tunnel Main 1 – NS Forces
12. Huger Tunnel Main 2 – NS Forces
13. Slide Fence MP N-399.9 – NS Forces

Project Status – Complete

14. Hemphill No. 1 Tunnel – R J Corman & NS Forces
15. Hemphill No. 2 Tunnel – R J Corman & NS Forces
16. Through Truss Bridge N-402.92 – LC Whitford
17. Antler No. 1 Tunnel – LRL Construction & NS Forces
18. Antler No. 2 Tunnel – LRL Construction & NS Forces
19. Twin Branch No. 1 Tunnel – LRL Construction & NS Forces
20. Twin Branch No. 1 Tunnel – LRL Construction & NS Forces
21. Slide Fence MP N-418.3 NS Forces

Project Status – Complete

22. Signal MP N-422.5 NS Forces
23. Through Truss Bridge N-462.3 – LC Whitford
24. Big Sandy No. 2 – 380 LF – Polvika Int. & NS Forces
25. Through Truss Bridge N-576.93 – Fenton Rigging
26. Track Shift OHB N-579.83 – Howard & NS Forces
27. Through Truss Bridge N-653.84 – NS Forces
28. Through Truss Bridge N-683.96 – NS Forces
29. Advance IPP – Glen Alum, Hatfield, Williamson, Tunnel 1, Tunnel 3, Tunnel 4 – JWG

Project Status – Underway

1. Cooper Tunnel – 698 LF – LRL Construction (LRL) – 698 LF TLR Type C – 60 of 175 steel sets installed
2. West Vivian Tunnel – 680 LF – (LRL) –200 LF TLR – 480 LF notch – LRL Complete
3. Big Four No. 1 Tunnel – 645 LF – (LRL) – 645 LF notch – LRL Complete
4. Big Four No. 2 Tunnel – 174 LF – (LRL) – 174 LF notch – LRL Complete

Project Status – Underway

5. Welch Tunnel – 1,335 LF – R. J. Corman (RJC) – 205 LF TLR – 1,130 LF notch – RJC Complete
6. Vaughan Tunnel – 1,113 LF – (JWG) – 839 LF TLR – 274 LF notch – JWG Complete
7. Roderfield Tunnel – 924 LF – (JWG) – 96 LF TLR – 828 LF notch – Notching liner complete 10/25 – JWG Complete
8. Laurel Tunnel – 803 LF – (JWG) – 443 LF TLR – 360 LF notch – JWG Complete

Project Status – Underway

9. Gordon Tunnel – 1,271 LF – (JWG) – 364 LF TLR – 907 LF notch – JWG Complete
10. Glen Alum Tunnel – 1,302 LF – (JWG) – 1,302 LF Notch – JWG Nearing Completion
11. Hatfield Tunnel (Main 2) – 977 LF –(JWG) – Enlarge unlined tunnel and apply gunite – JWG Complete
12. Slide Fence MP N-467.2 – NS Forces

Project Status – Underway

13. Williamson Tunnel – 678 LF – (JWG) – 678 LF TLR – Sidewall grouting 100% – Installing bolts
14. Tunnel No. 1 – 2,627 LF – (JWG) – 2,627 LF TLR – Liner removal underway
15. Tunnel N0. 3 – 1,848 LF – (JWG) – 1848 LF TLR – Drilling grout holes
16. Tunnel No. 4 – 2,068 LF – (RJC) – 100 LF TLR – 1,968 LF Notch – RJC mobilizing

Track Lowering

- Used at 5 tunnels
- Performed in 1980's for 19'-6"

Track Lowering

- Limited applications

Notching (Minor)

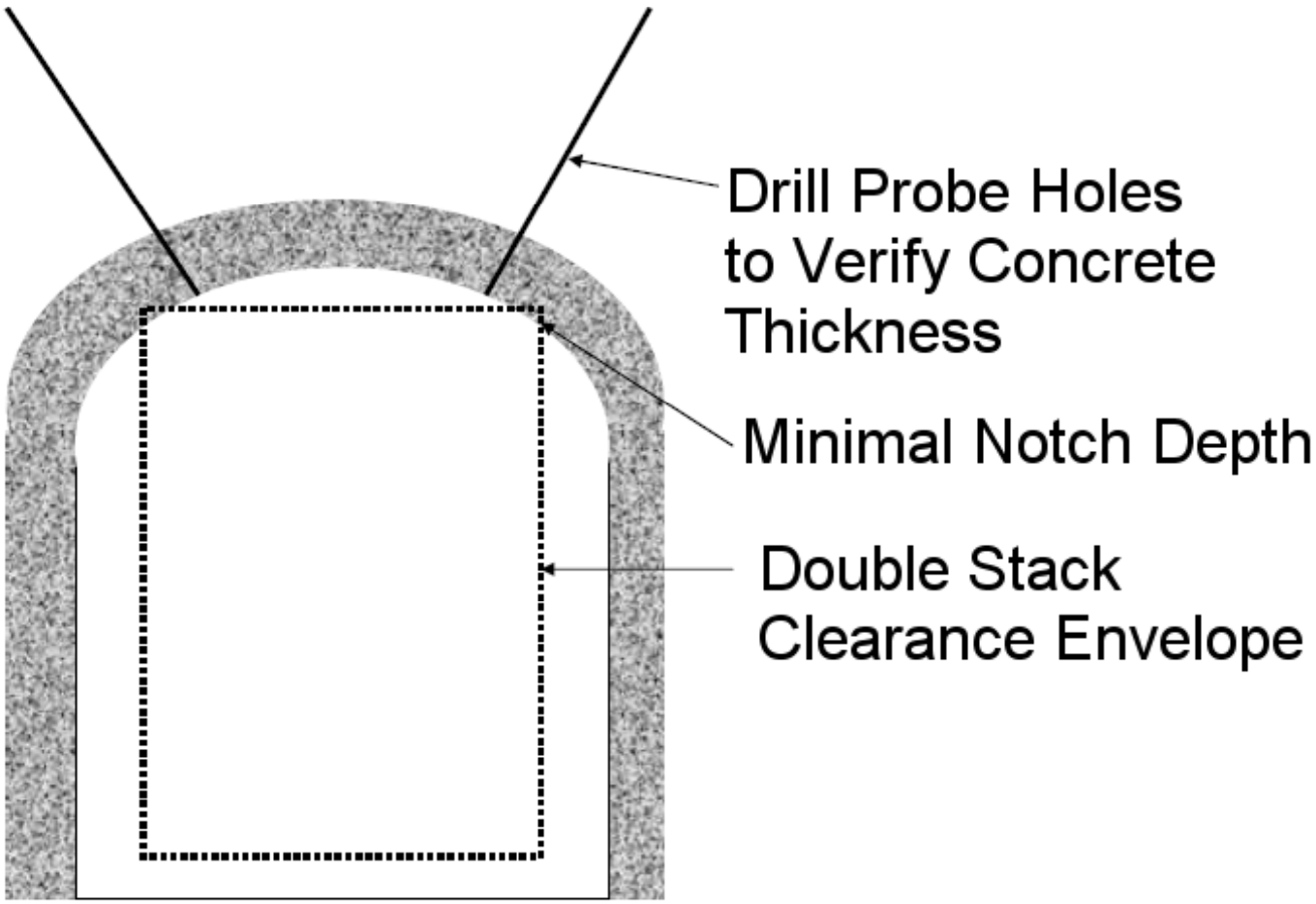

Hemphill 1
RJ CORMAN

Notching (Deep)

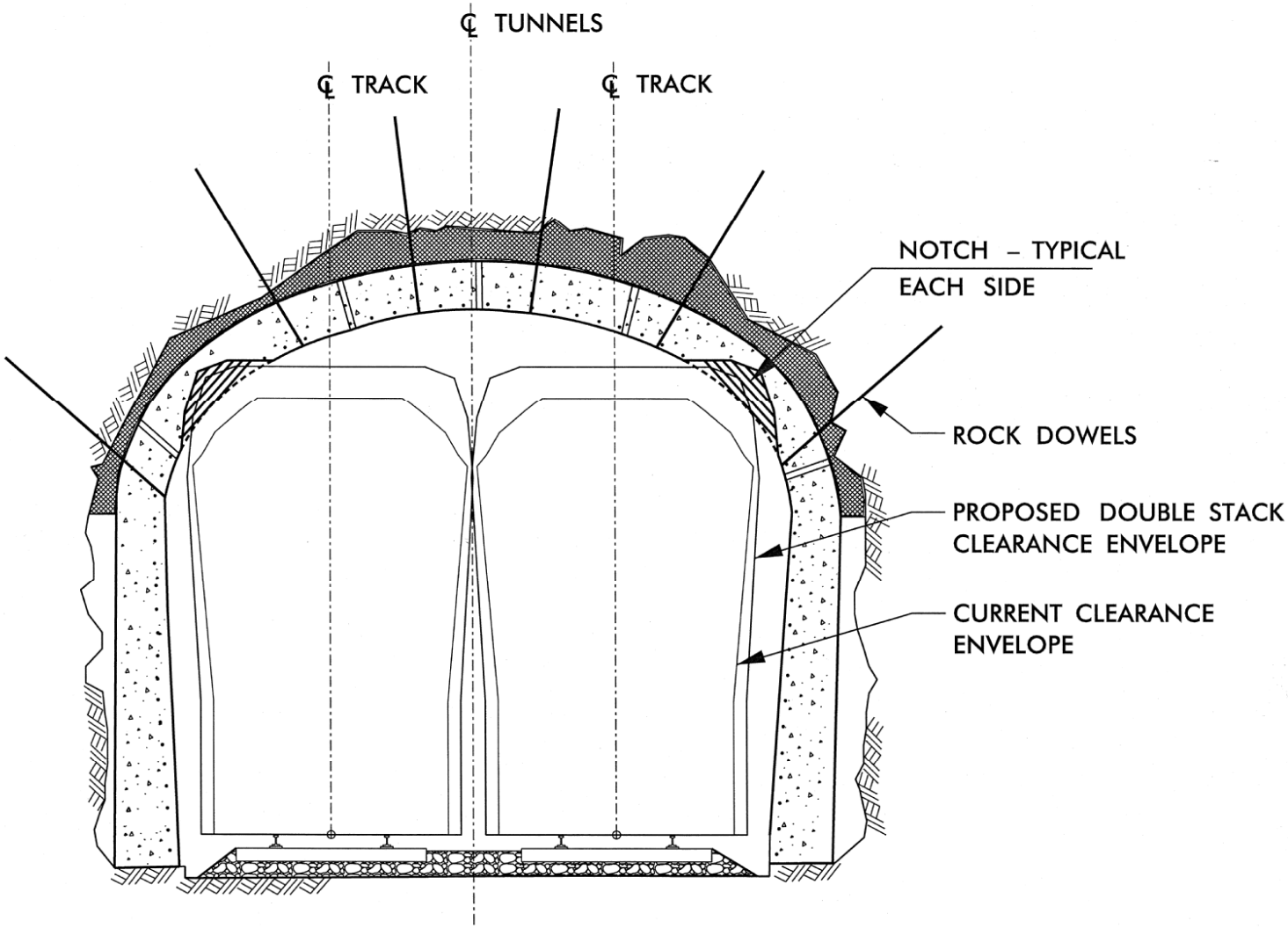

ROCK DRILL IN TWIN BRANCH 1

ROADHEADER TWIN BRANCH 2

NOTCHING RODERFIELD

CAT
CAT

West End Antler 1 Portal Spiling

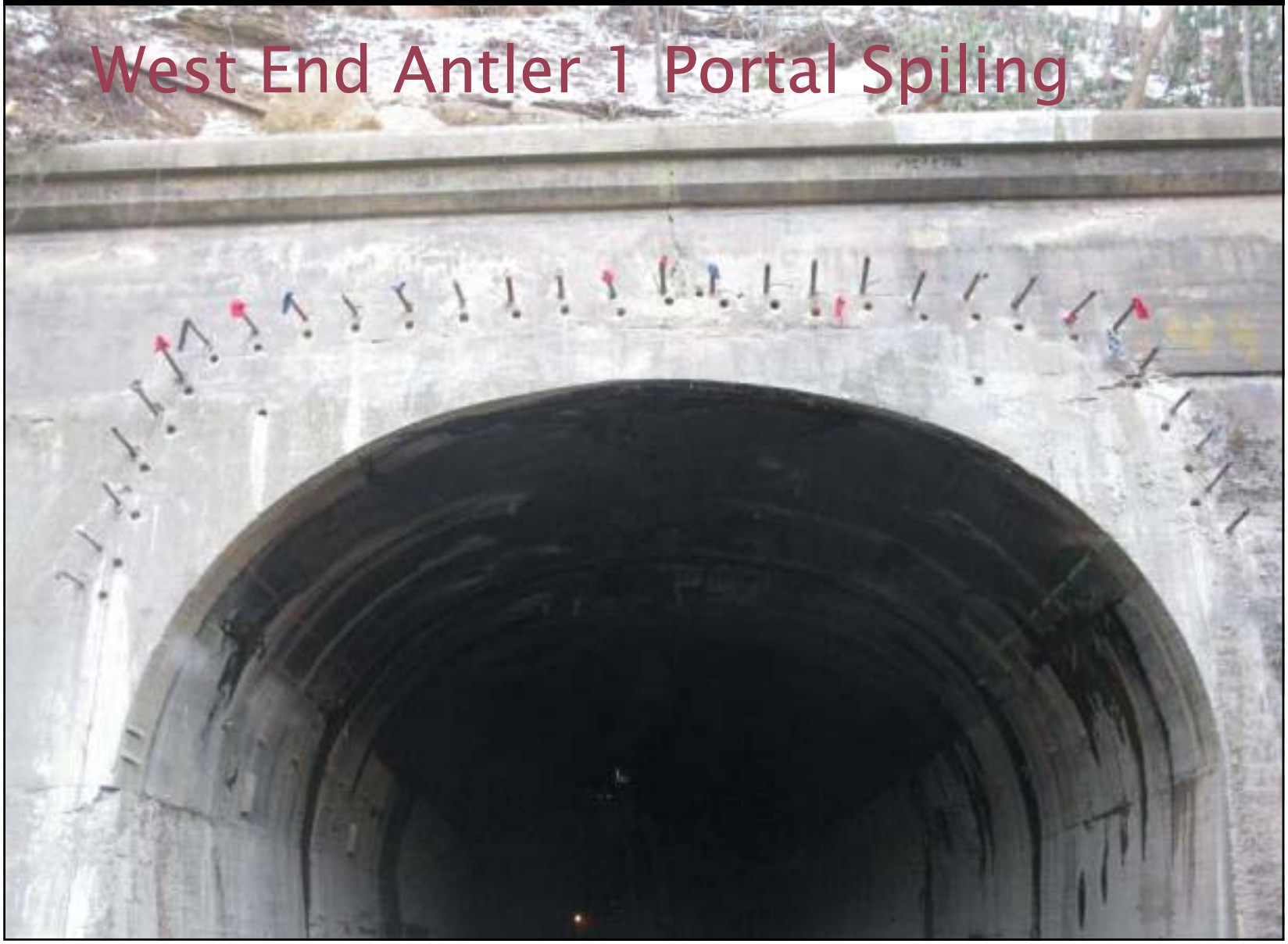

Crown Replacement

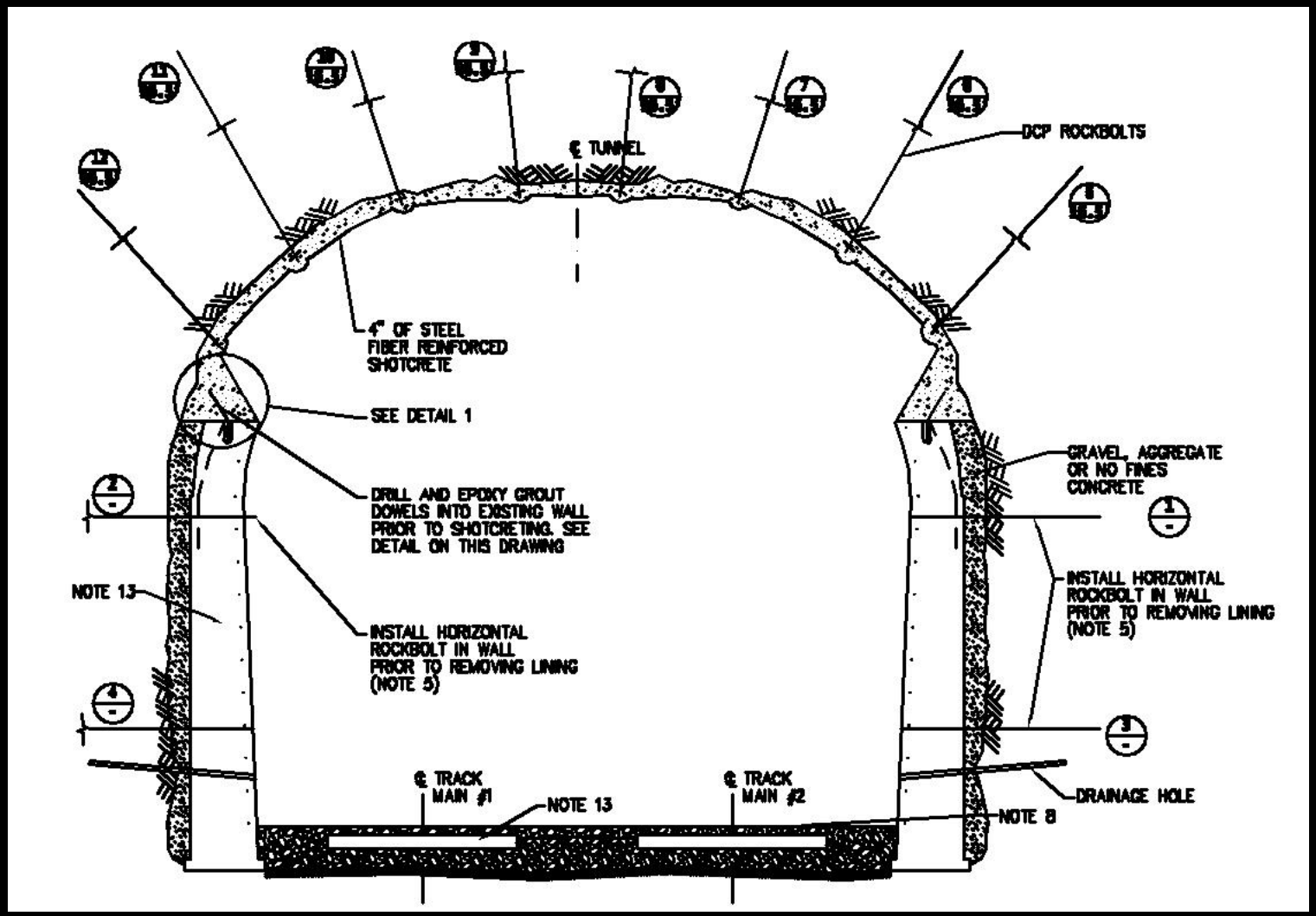

Typical Cowan Tunnel

34

ANTLER 2

Crown Replacement
Type C Ground

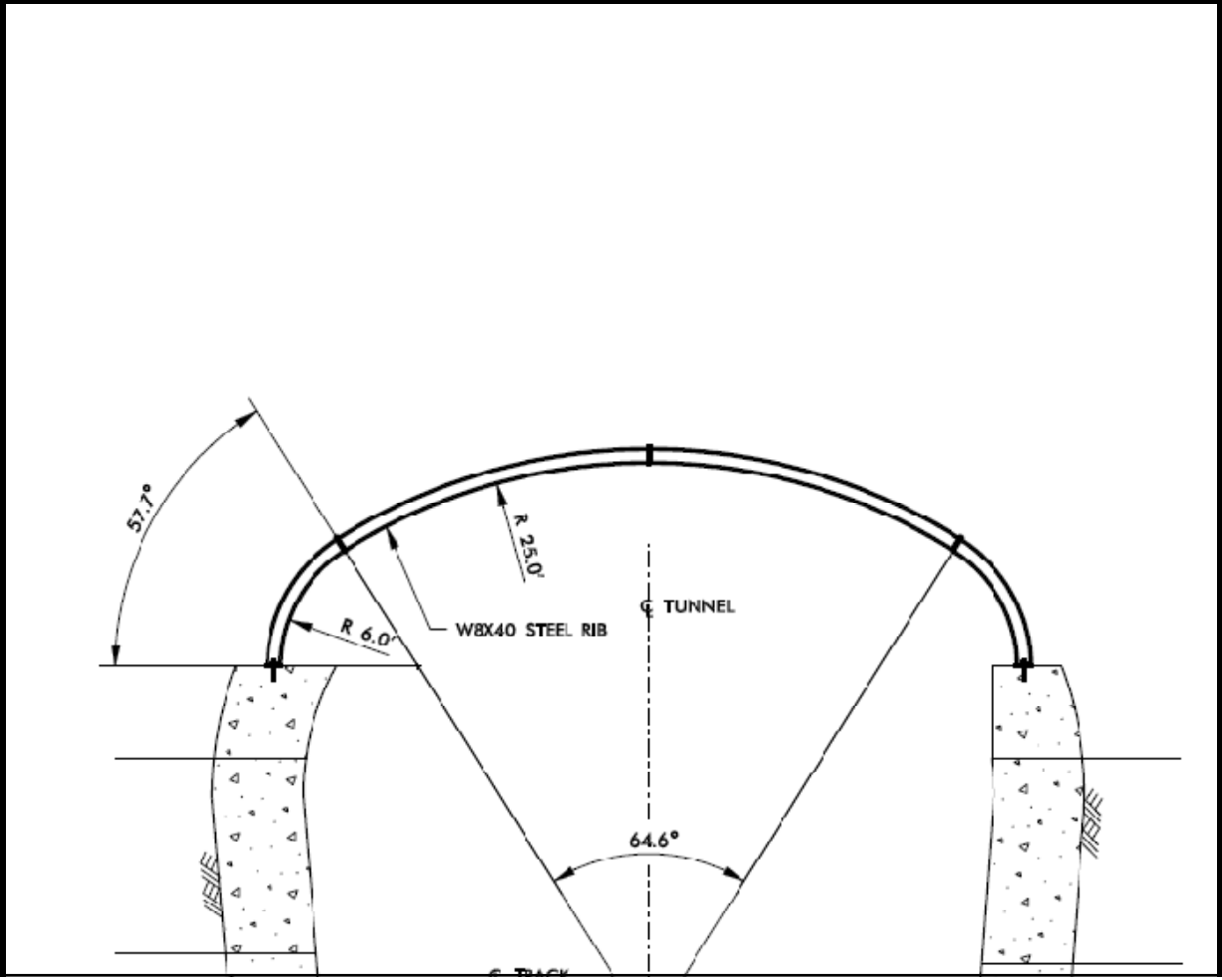

EAST PORTAL COWAN TUNNEL

GROUT TRAIN ANTLER 1

ANTLER 1 STEEL SETS

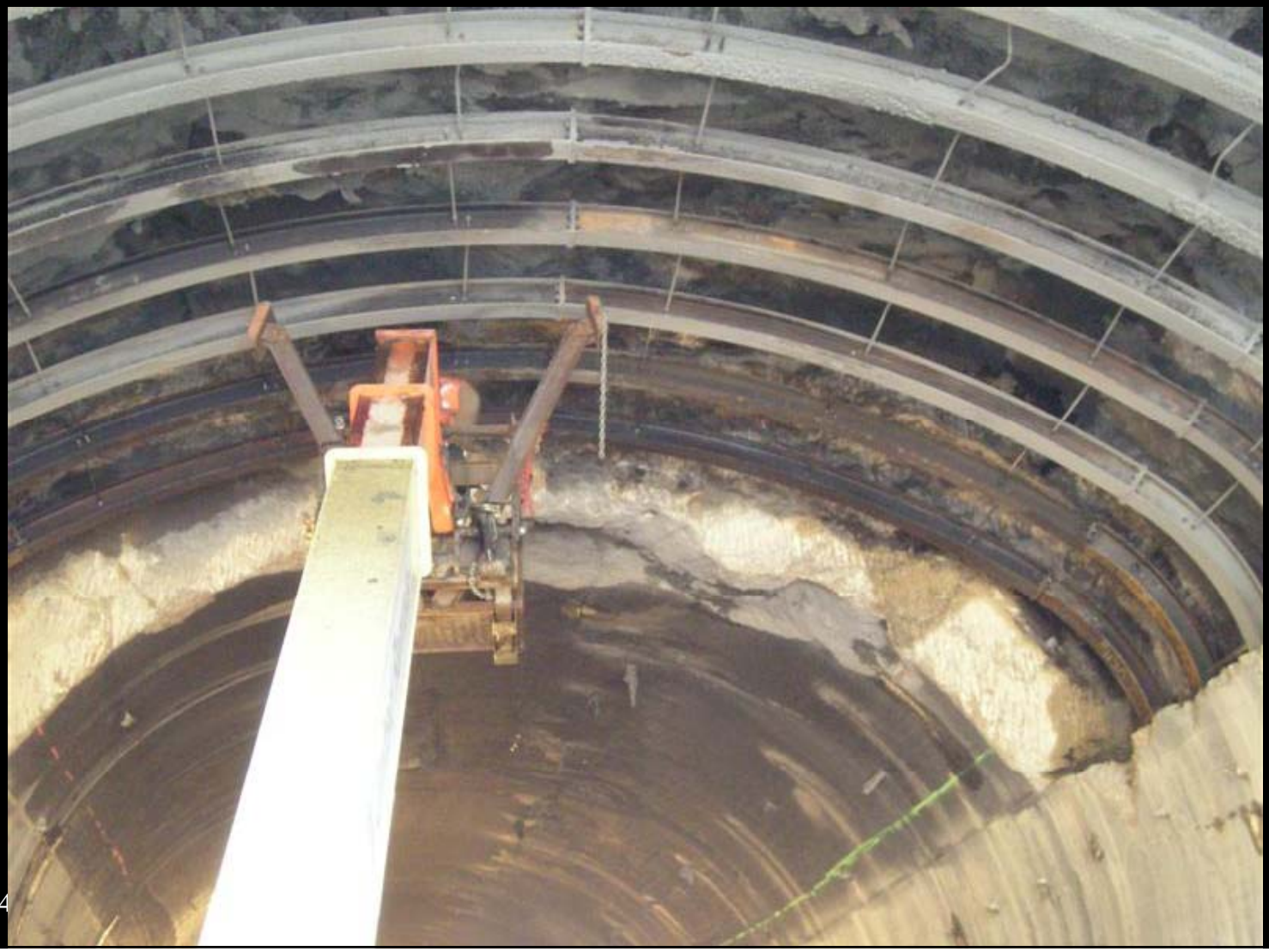

4

Project Tunnel Contract Summary

Complete – 20,924 LF

Underway – 7,919 LF

Heartland Corridor Clearance Improvement Project Material Quantities

Tunnel	Rock Bolts Number	Rock Bolts LF	Rock Bolts Miles	Cement Grout Tons	Shotcrete Cement Tons	Steel Sets Number	Steel Sets Tons	Cable Bolts Number	Cable Bolts Miles
Cowan	6,368	72,105	13.66	880	3,960				
Cooper			0.00						
West Vivian	1,231	22,870	4.33	1,677					
Big Four 1	423	8,195	1.55	2,253					
Big Four 2	239	2,960	0.56	875					
Welch	2,256	43,385	8.22	9,978					
Hemphill 1 & 2 Contract	4,308	68,788	13.03	17,852	601				
Antler 1 & 2 and Twin Branch 1 & 2 Contract	4,479	81,432	15.42	13,108	3,250	160	279		
Vaughan, Roderfield, Laurel, Gordon Contract	6,331	114,387	21.66			106	47	1,860	10.57
Glen Alum			0.00						
Hatfield			0.00						
Williamson			0.00						
Tunnel No. 1			0.00						
Tunnel No. 3			0.00						
Tunnel No. 4			0.00						
Total	25,635	414,122	78.43	46,623	7,811	266	326	1,860	10.57

51