PRÜFAMT FÜR BAU VON LANDVERKEHRSWEGEN
O. PROF. DR.-ING. JOSEF EISENMANN
TECHNISCHE UNIVERSITÄT MÜNCHEN

Report No. 881
22. 8.1979

Research Report

Testing of the McKay 'Safelok' Rail Fastening System

(McKay Ltd., Australia)

Munich, 22. August 1979
Dr.Ley/Es

Research Report No. 881

Testing of the McKay 'Safelok' Rail Fastening System

(McKay Ltd., Australia)

1. GENERAL

At the request of Ralph McKay Ltd., Australia, rail fastener tests in accordance with the specifications of the Deutsche Bundesbahn (DB) and in some points in accordance with the recommendations of the AREA have been performed to prove the 'Safelok' fastening assembly for heavy track loadings and to estimate the service life. The tests consisted of

- fatigue tests with clips, including calibration
- fastening system pulsating load test
- fastening system uplift test
- fastening system longitudinal restraint test

2. SYSTEM COMPONENTS

For the fastening repeated-load test a special concrete sleeper (app. 1) was manufactured by McKay Ltd. The concrete strength was in accordance with AS A 1481 at 28 days 50 N/mm^2, the concrete surface was obviously very smooth. The sleeper has an inclination at the rail seats of 1 in 20 and is designed for 68 kg/m AREA rail.

The components of the fastening system (app. 2) are

- the spring clip (app. 3) out of silicon manganese spring steel, hardened and tempered; they are identified by letters and numbers
- the shoulders (app. 4) out of 8,0 mm thick medium carbon steel

- the insulator (app. 5) out of glass filled, light and heat stabilised nylon
- the resilient pads (app. 6) with a textured surface on both sides out of high density polyethylene.

All parts have been manufactured by or for McKay Ltd. and submitted to the Prüfamt für Bau von Landverkehrswegen.

3. CLIP FATIGUE TESTS

In accordance with the recommendations of the Deutsche Bundesbahn (DB) pairs of clips have been calibrated up to a maximum load of 22 kN per pair. The testing equipment is shown in app. 18.

The first loading was applied in increments of 4 kN and the corresponding deflections measured. After each step the load was released to zero and any permanent set measured. The clip was then loaded without steps 8 times. The 10th loading was then applied incrementally and the deflections recorded.

Afterwards the pairs were fatigue tested in the same machine to 5×10^6 load cycles with a maximum load of 22 kN and a corresponding total deflection of approximately 14,0 mm. The oscillating deflection was 1,4 mm and from field measurements it is known that this deflection is about twice as high as found in very severe track conditions.

At the end of the fatigue test the clips were again recalibrated incrementally. Finally an ultimate load test was done.

Six clips (No. A 28, A 39, D 14, X 23, D 13 and C 36) were subjected to the forgoing test and during the 5×10^6 load cycles no failure occured in any clip. The calibration graphs are shown in app. 7 to 10. It was evident that the permanent set at the end of the fatigue test was very small (0,17 mm to 0,28 mm).

On the test sleeper assembly (chapter 4.3) the measured average clip deflection per rail seat was 11,75 mm and from the calibration graphs (app. 7 to 9) it can be seen that this should produce a clamping force of 18 kN. This was in agreement with the actual uplift test (chapter 5).

4. FASTENING SYSTEM PULSATING LOAD TEST

4.1 Method of Test

A photograph of the laboratory test machine is shown in app. 19 and the principle of operation is shown in app. 14.

The special concrete test sleeper with reduced gauge (app. 1) was clamped to the test machine table and a gypsum grout was used at the interface to ensure a uniform load distribution. The arms of the test machine applied bi-axial forces to the rail head as occurs in track having sharp curvature plus heavy axle loads, and the angle between the force and the vertical was 31,5^{o}.

A static incrementally increasing pre-load was first applied to the rail and then pulsating forces were applied at a frequency of 3 Hz which is equivalent to a single axle passing over the rail at about 60 km/h. However for bogies the equivalent speed would be up to 85 km/h. A total of 5 million load cycles were applied in all, while dial gauges (1/100 mm graduations) were used to measure gauge widening, translation (flange separation) and tilting of the rail.

To check the behaviour of the plastic pads and insulators under summer conditions some test phases were done with the rail temperature elevated up to 60 ^{o}C.

4.2 Forces and Equivalent Axle Loads

VERTICAL FORCE

To determine the vertical force which has to be imposed on only one sleeper to represent an equivalent axle load the following points need to be taken into consideration (1):

- THE LOAD DISTRIBUTING CAPABILITY OF THE RAIL

  Depends on the bearing capacity of subgrade, sleeper size, spacing and stiffness of rail. Under medium subgrade conditions with a sleeper contact area of about 10 000 cm^2 per meter of track, and spacing of 65 cm plus a rail with a moment of inertia of 2 000 cm^4 the load distributing factor results in a mean value of 0,4, i.e. 40 % of the axle load is applied to one sleeper. Using another contact area A^+, rail with a moment of inertia J^+ or different spacing s^+ the load distributing factor can be corrected using the equations

  $$\sqrt[4]{\left(\frac{A}{A^+}\right)^3} \quad \text{or} \quad \sqrt[4]{\frac{J}{J^+}} \quad \text{or} \quad \sqrt[4]{\left(\frac{s^+}{s}\right)^3}$$

  respectively (theory of Zimmermann (1)).

- THE SCATTERING OF STRESSES AND DEFLECTIONS IN THE TRACK

  Depends on track conditions and speed (app. 11). For a statistical confidence level of P = 68,3 %, which is sufficient for the design of fastening systems (1), bad track conditions and a maximum speed of 60 to 80 km/h the maximum forces increase to

  $$F_{max} = F_{mean\ value} \times (1 + 1{,}0 \times 0{,}3)$$

  $$F_{max} = 1{,}3 \times F_{mean\ value}$$

- VERTICAL LOAD INCREASE DUE TO CENTRIFUGAL EFFECT IN CURVES

  Depends on speed, superelevation, gauge and the height of the center of gravity of the cars. Even under very severe conditions it does not exceed a value of 25 %.

Loads for the actual test:

The fastening system under study is designed for 68 kg/m AREA rail with a moment of inertia J = 3 940 cm^4. Assuming a spacing of 65 cm and the above mentioned conditions for calculation of the maximum vertical test forces the axle load has to be reduced by the factor f:

$$f = 0,4 \times \sqrt[4]{\frac{2\ 000}{3\ 940}} \times 1,3 \times 1,25 = \underline{\underline{0,55}}$$

LATERAL FORCE

To determine the lateral force which has to be imposed on one sleeper a load distributing factor of 50 % to 60 % can be assumed. The acting lateral forces in track depend on bogie construction and distance, radius of curvature, unbalanced acceleration and coefficient of lateral friction. Some results of measurements are shown in fig. 1. The forces are mean values, the maximum values can be calculated by the same statistical consideration as outlined before.

Fig. 1: Measured lateral forces (mean values) for an unbalanced acceleration of φ = 0,65 m/s^2 (2)

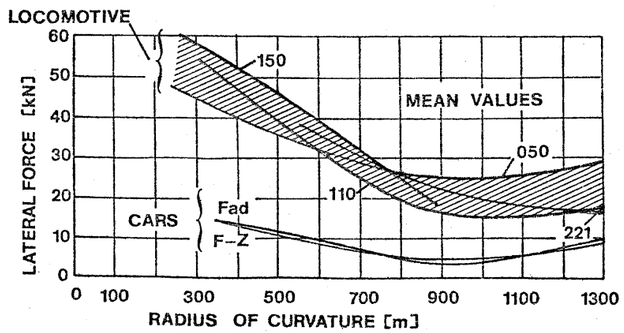

The maximum pulsating forces chosen as follows have been:

a) Q_v = 150 kN = 75 kN/rail vertical component
= 46 kN/rail lateral component

Under the assumed conditions this force represents an equivalent axle load of 27 t.

b) Q_v = 200 kN = 100 kN/rail vertical component
= 61 kN/rail lateral component

This force represents an equivalent axle load of 36 t.

c) Q_v = 220 kN = 110 kN/rail vertical component
= 67 kN/rail lateral component

This force represents an equivalent axle load of 40 t.

From fig. 1 it is evident that these lateral components represent maximum lateral forces in the track, only as occurs with very heavy locomotives in curves with a radius of about 300 m. The pulsating minimum force remained constant with

Q = 10 kN = 5 kN/rail vertical component
= 3 kN/rail horizontal component

4.3 Results

Separate pad tests

Two pads were separately subjected to a vertical load to produce a compressive stress and the corresponding deflections were measured. The results in app. 12 and 13 show that they are somewhat stiff but nevertheless have sufficient elasticity to equalize normal variations in the surfaces

of the sleeper and rail seat. There is also sufficient elasticity to dampen dynamic forces due to wheel flats.

There was a cinsiderable difference in the deflection characteristics of the two pads which resulted from the curvature of one pad however this is of no importance for field use.

The first loading was applied in increments of 25 kN; after each step the load was released to 0 kN to get the permanent set. The 10th loading was applied without releasing.

Tests on the complete assembly

Clips D 19, K 13, C 20 and E 22 were used for this test together with new insulators and pads. The mean actual installed deflection for the two outer clips (D 19 and E 22) was 12,5 mm while the mean deflection for the inner clips K 13 and C 20 was 11,0 mm.

The difference in deflection was mainly caused by both rail sections being located against the outer shoulder thus leaving a small gap between the inner shoulder and rail flange.

This results in the clip prongs being positioned further up the rail flange incline on one side compared to the other with a consequent deflection difference. By using the clip calibration graphs (app. 7 to 9) it can be shown that the mean clamping force per rail seat was 18 kN (see chapter 5).

During the test phases the fastening system was subjected to the following load cycles with equivalent axle loads between 27 t to 40 t. The 5×10^6 load cycles represent a total track tonnage of 172×10^6 gross tons (table 1).

Based on a typical track tonnage per day, the tests represent a service time of more than 20 years (table 2). However it must be noted that the pulsating load, tests only the behaviour under traffic conditions, not the aging effects (UV-rays, shrinkage of concrete etc.) are tested.

Table 1: Load cycles and cumulative equivalent track tonnage

10^6 Load cycles	equivalent axle load (t)	cumulative equivalent track tonnage (gross tons)	temperature
1	27	27 x 10^6	T = 20 °C
2	36	72 x 10^6	
0,5	40	20 x 10^6	
0,25	27	6,75 x 10^6	T = 50 to 60 °C
0,95	36	34,2 x 10^6	
0,30	40	12 x 10^6	
5,0		172 x 10^6	

Table 2: Test results expressed in daily gross tonnage and service time

Gross track tonnage per day	represented service time
25 000	20 years
50 000	10 years
100 000	5 years

The readings of gauge widening and translation (flange separation) are plotted in app. 14 and twisting of the rail in app. 15. From the curves it is evident

that

- after a bedding-down effect all readings remain nearly totally constant with growing load cycles
- there is only a small increasing of displacements with rising axle load
- at a temperature of 60 °C and a force representing an axle load of 40 t there was only a small increase of gauge widening, which was not severe as it showed a declining rate with rising load cycles.

It can be concluded that the fastening assembly in practice will behave well for a much longer time than represented by the tests. The measured displacements would satisfy the requirements of the Deutsche Bundesbahn (DB). At the end of the pulsating load test no failure of any component of the system was evident. Photographs of components are shown in app. 20.

5. FASTENING SYSTEM UPLIFT TEST

At the end of the pulsating load test without disturbing the rail fastening assembly a fastening uplift test has been performed similar to the recommendations of the AREA, published in 1978, art. 10.9.1.10. In accordance with the diagram V of that specification a central load was applied by a threaded rod in the rail-head (app. 21); the inclination of the rail seat was equalized by tilting the tie. The load P at which separation of the rail from pad occured was checked on the rail seat (clipsD 19 and K 13) and found to be P = 18 kN. There is a good agreement with the clamping force determined at the beginning of the fastening pulsating load test by displacement measurements

of the clips (see chapter 4.3). So a minimum clamping force of the system under study of 9 kN per clip can be derived.

The load then was completely released. Afterwards a load of 1,5 x P = 27 kN was applied. There was no crack in the concrete or loosening of the shoulder, no component of the fastening system fractured. The requirements of the AREA-test therefore have been met.

6. FASTENING SYSTEM LONGITUDINAL RESTRAINT TEST

The fastening system under study must be able to avoid excessive longitudinal movement of the rail due to tensile stresses induced by temperature change and/or traffic. This is especially important if a break occurs in the continously welded rail at low temperatures, which could result in a gap widening at the fracture, if the creep resistance of the system is too low.

From many field measurements it is known that the longitudinal friction resistance of half a sleeper in ballast is about 7 N per mm of track length (1), related to one rail. From this fact it can be concluded that one fastening system should have under very severe conditions (pads with permanent set, loosened screws, acting vibrations) a minimum creep resistance of 5 kN. The Deutsche Bundesbahn (DB) normally requires a safety factor of 1,5.

The fastening system longitudinal restraint test has been carried out in a special facility, where the tie was held in a very stiff girder construction (app. 22). By a hydraulic jack a pulling force parallel to rail axis was applied to the rail foot with an increase of load of about 10 kN/min. The forces applied to the rail and the corresponding rail displacement were measured by electrical instruments and the results were plotted by an XY-writer.

The tests were performed static and with vibrations produced by a vibrating machine on rail head (app. 22), which produces a vibration spectrum between 30 Hz and 120 Hz with maximum dynamic forces of ± 0,8 kN.

The results of the first 3 static and 3 dynamic tests are plotted in app. 16. It is evident that with the first static and also dynamic test a movement of the pad on concrete surface occurs. It must be mentioned that the concrete surface of the prototype sleeper was very smooth. With rising displacement an increase of the creep resistance occurs, due to a locking-effect of the insulator and pad on the shoulder (2nd test). This mainly results from the interaction of the insulator curved ends and the shoulder corner radii which produce a wedging effect on the edges of the rail flange. The movement then occurs between rail and pad and insulator, respectively.

The results of the second 3 static and 3 dynamic tests, which were done with new insulators and pads are plotted in app. 17. A similar behaviour was shown.

It is evident that the dimensions on the locking curves of the insulator and pad allow some movement relative to the shoulder before the secondary resisting effect takes place.

The test showed that a primary creep resistance of at least 7,5 kN can be expected without the assistance of the secondary locking device. This value meets the requirements of the DB.

However if a small modification was made to the pad and insulator to bring the curves closer together the secondary locking effect would be produced with less movement and a creep resistance of at least 12 kN would result.

SUMMARY AND CONCLUSIONS

LOAD DEFLECTION CHARACTERISTICS

These have been found for 6 clips by calibration in pairs as for a single rail seat. The test sleeper assembly produced a mean deflection of 11,75 mm per rail seat and the graphs indicate that the corresponding clamping force was 18 kN.

FATIGUE TESTS

Were done on 6 clips with a maximum load of 22 kN per pair and a total deflection of approx. 14 mm. The oscillating deflection was 1,4 mm; 5×10^6 load cycles were applied at 16 2/3 Hz and no failures occured. Therefore the requirements of the Deutsche Bundesbahn have been met.

FASTENING SYSTEM PULSATING LOAD TEST

This was done with a special concrete sleeper, 68 kg/m AREA rail, inclination of rail seats 1 in 20. 5×10^6 load cycles were applied in different test phases at temperatures from 20 to 60 ^{o}C with forces which represent axle loads of 27t, 36 t and 40 t in a curvature of 300 m radius within the speed range of 60 to 80 km/h. This loading represents a cumulative equivalent track tonnage of 172×10^6 gross tons. The registrated gauge widening, translation and twisting of the rails were low and remain almost constant with rising load cycles and rising axle load. This shows that the tested fastening system has excellent gauge holding qualities. The measured displacements satisfy the recommendations of the Deutsche Bundesbahn. No failure occured on any component of the system.

FASTENING SYSTEM UPLIFT TEST

This was done after the pulsating load test without dismantling the components and the actual clamping force was found to be 18 kN per rail seat.

CREEP TEST

A minimum creep resistance of 7,5 kN was found which satisfies the DB requirements. Movement occurred first between pad and sleeper surface.

The tests also indicated that if a small modification was made to the pad and insulator a minimum creep resistance of 12 kN would result due to the additional holding force of the secondary locking device.

CONCLUSION

The tests showed that with the 'Safelok' system a long service life can be expected without failures or maintenance. With rail seats inclined at 1 in 20 it is satisfactory for axle loads of up to 40 t and minimum curve radii of 300 m standard gauge or 400 m broad gauge.

Dr.-Ing. J. Eisenmann
o.Prof.

Dr.-Ing. G. Leykauf
Research Chief Engineer

REFERENCES

1 Eisenmann, J.

Die Schiene als Träger und Fahrbahn - theoretische Grundlagen und praktische Beispiele
"Die Eisenbahnschiene", Verlag Wilh. Ernst & Sohn, 1977, S. 9 - 78

2 Birmann, F., Eisenmann, J.

Reihenmessungen an der Schiene zur Ermittlung der Führungskräfte
ETR 1966, Heft 5, S. 155 - 164

LIST OF APPENDIXES

DRAWINGS

CALIBRATION OF CLIPS

FASTENING SYSTEM PULSATING LOAD TEST

FASTENING SYSTEM LONGITUDINAL RESTRAINT TEST

PHOTOGRAPHS

EX-4759

THIRD ANGLE PROJECTION

ALL DIMENSIONS IN MILLIMETRES
TOLERANCE ON DIMENSIONS UNLESS OTHERWISE SPECIFIED
LINEAR ± 1.0mm
ANGULAR ± 1°
DRILL AND PUNCHED HOLE DIAMETERS ± 0.5mm

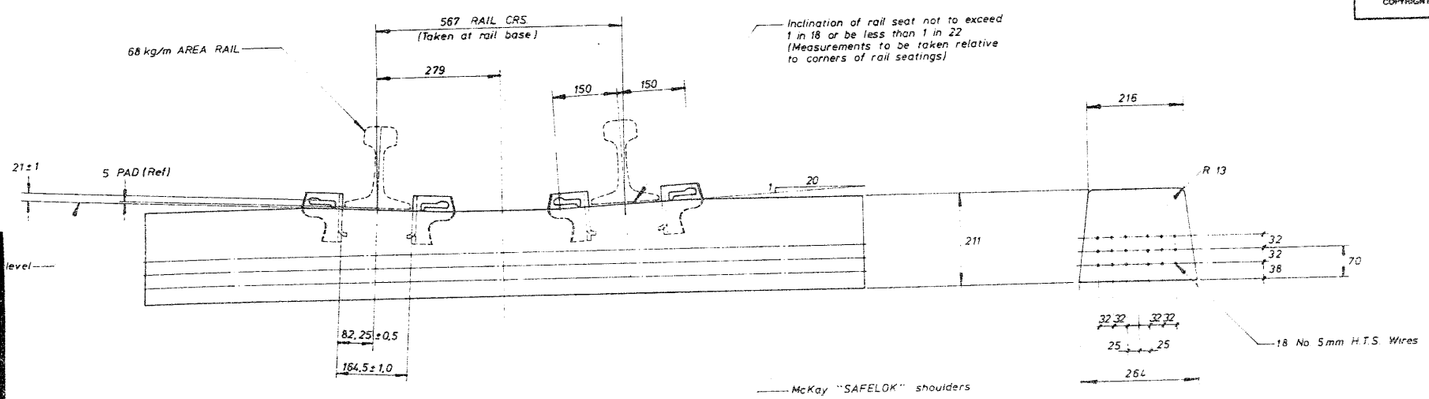

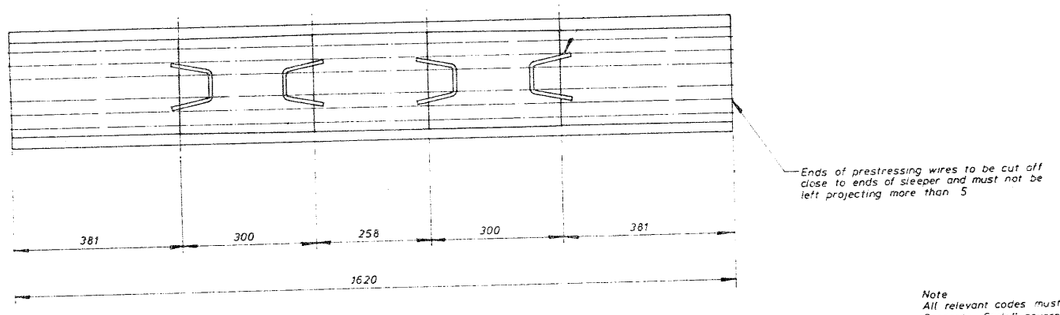

Note
All relevant codes must be adhered to and code AS 1481 - 1974 "Prestressed Concrete Code" governs
Concrete to be F'c = 50MPa at 28 days

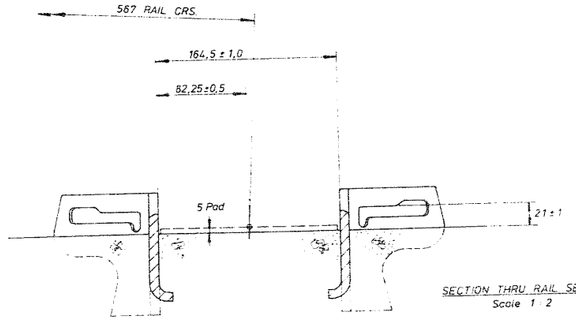

SECTION THRU RAIL SEAT AREA
Scale 1 2

ITEM / PART No	
MATERIAL	
DESCRIPTION	RALPH McKAY LIMITED – COMPONENTS DIVISION
TITLE	SLEEPER - TEST
DO NOT SCALE	DRAWN RGMB 2-79
THIRD ANGLE PROJECTION	CHECKED / APPROVED
REQUIRED	
SCALE	1 5
PART No	EX - 4759

REVISION / ORIGIN / DATE

App. 1

EX-4755

3RD ANGLE PROJECTION

TOLERANCES ON DIMENSIONS UNLESS OTHERWISE SPECIFIED
LINEAR ± 1·0mm
ANGULAR ± 1°
DRILL AND PUNCHED HOLE DIAMETERS ± 0·5mm

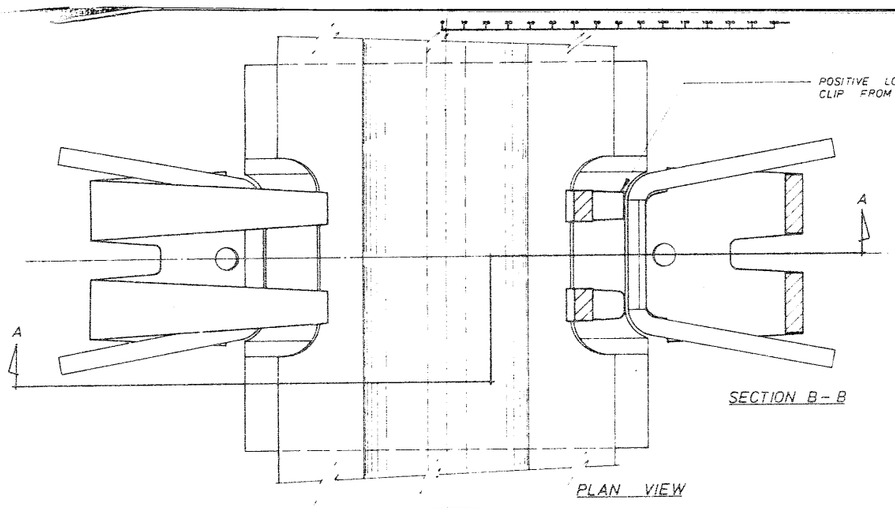

TIME TO FIT ONE CLIP USING SPECIAL HAND TOOL = 15 Seconds
TIME TO REMOVE ONE CLIP USING SPECIAL HAND TOOL = 10 Seconds

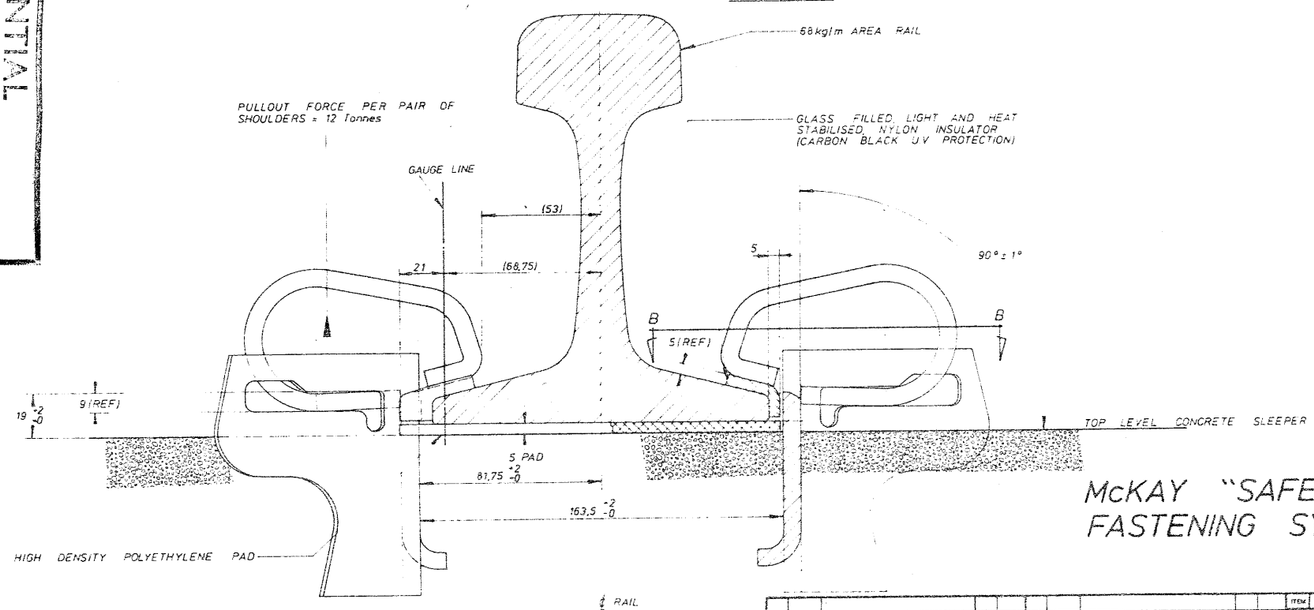

McKAY "SAFELOK" RAIL FASTENING SYSTEM

App. 2

ITEM	PART No	DESCRIPTION	REQ
MATERIAL		RALPH McKAY LIMITED – COMPONENTS DIVISION	
		TITLE 6·8 kg RAIL FASTENING SYSTEM	

DO NOT SCALE	DRAWN	RGM 6-2-79	REQUIRED
THIRD ANGLE PROJECTION	CHECKED		SCALE 1 : 1
	APPROVED		

PART No EX - 4755

ISSUE	E.N. NO	REVISION	ORDER	DATE	ISSUE	E.N. NO	REVISION	ORDER	DATE

EX-4846

3RD ANGLE PROJECTION

ALL DIMENSIONS IN MILLIMETRES
TOLERANCE ON DIMENSIONS UNLESS OTHERWISE SPECIFIED
LINEAR ± 1·0mm
ANGULAR ± ½°
DRILL AND PUNCHED HOLE DIAMETERS ± 0·5mm

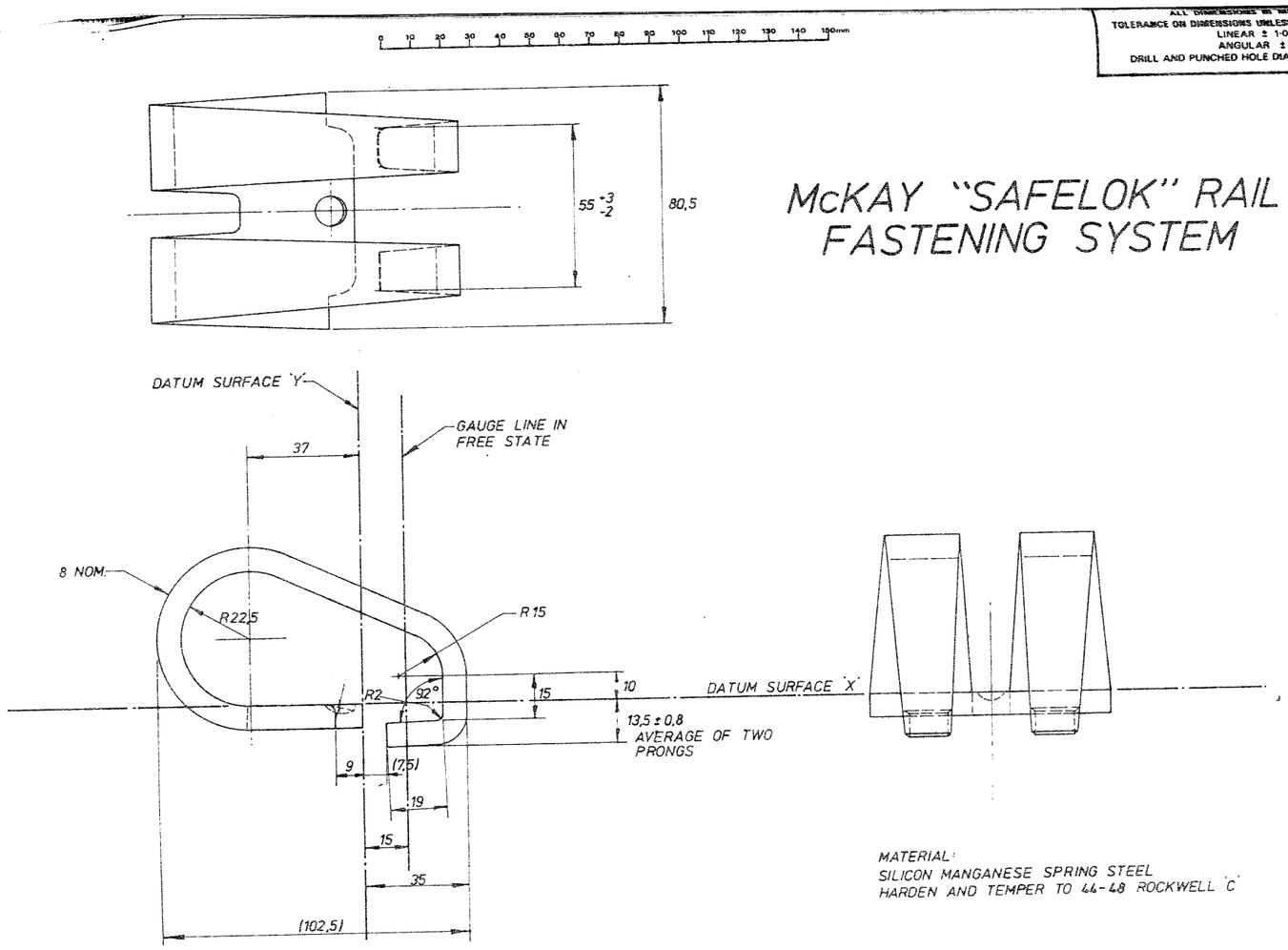

McKAY "SAFELOK" RAIL FASTENING SYSTEM

MATERIAL:
SILICON MANGANESE SPRING STEEL
HARDEN AND TEMPER TO 44-48 ROCKWELL 'C'

CONFIDENTIAL
COPY
Aug. 79

App. 3

ISSUE	E.N. Nº	REVISION	CHECKED	DATE	ISSUE	E.N. Nº	REVISION	CHECKED	DATE

ITEM	PART Nº	DESCRIPTION	REQ.

MATERIAL: AS NOTED

RALPH McKAY LIMITED – COMPONENTS DIVISION

TITLE SPRING CLIP

DO NOT SCALE

THIRD ANGLE PROJECTION

USED ON			REQUIRED	PART Nº
DRAWN	R G M	26-6-79		EX-4846
CHECKED			SCALE 1:1	
APPROVED				

1 2 3 4 5 6 7 8

PART Nº EX-4845

3RD ANGLE PROJECTION

ALL DIMENSIONS IN MILLIMETRES
TOLERANCE ON DIMENSIONS UNLESS OTHERWISE SPECIFIED
LINEAR ± 1·0mm
ANGULAR ± ½°
DRILL AND PUNCHED HOLE DIAMETERS ± 0·5mm

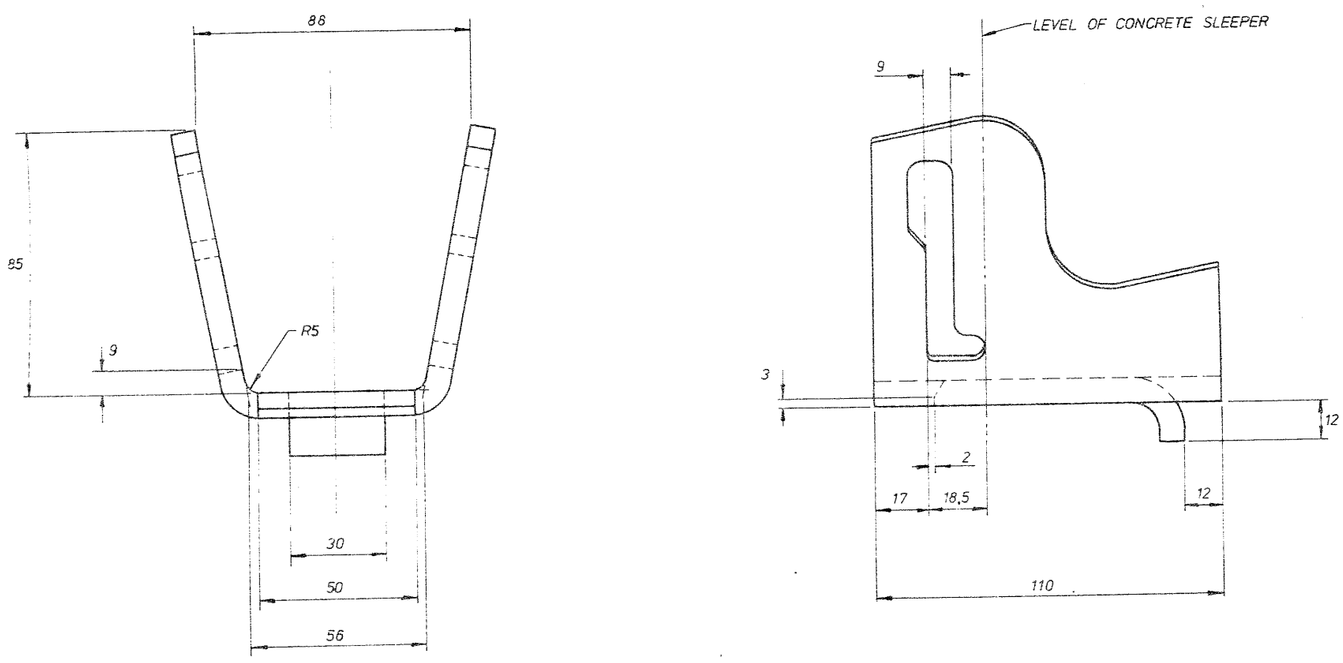

MATERIAL: 8.0 THICK MEDIUM CARBON STEEL

CONFIDENTIAL

22 Aug. 79

APP. 4

McKAY "SAFELOK" RAIL FASTENING SYSTEM

ISSUE	E.N. Nº	REVISION	CHECKED	DATE	ISSUE	E.N. Nº	REVISION	CHECKED	DATE

ITEM	PART Nº	DESCRIPTION	REQ
MATERIAL: AS STATED		RALPH McKAY LIMITED–COMPONENTS DIVISION	
		TITLE SHOULDER	
DO NOT SCALE		USED ON	
		DRAWN RGM 13·3·79	REQUIRED
THIRD ANGLE PROJECTION		CHECKED	SCALE 1:1
		APPROVED	PART Nº EX-4845

PART Nº EX-4844

3RD ANGLE PROJECTION

ALL DIMENSIONS IN MILLIMETRES
TOLERANCE ON DIMENSIONS UNLESS OTHERWISE SPECIFIED
LINEAR ± 1·0mm
ANGULAR ± ½°
DRILL AND PUNCHED HOLE DIAMETERS ± 0·5mm

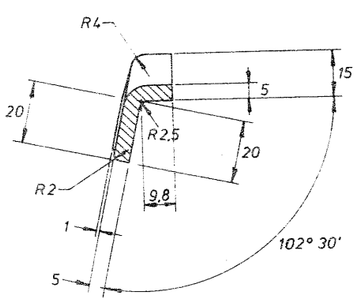

SECTION ON ℄

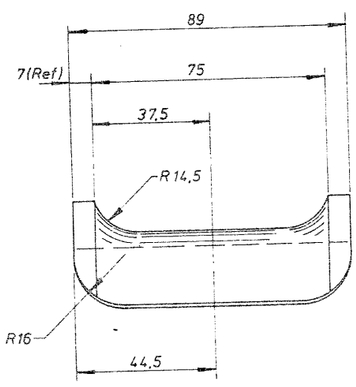

PLAN VIEW

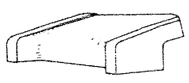

PICTORIAL VIEW

CONFIDENTIAL

Fig. 79

McKAY "SAFELOK" RAIL FASTENING SYSTEM

MATERIAL: GLASS FILLED, LIGHT AND HEAT STABILISED NYLON.

App.5

ISSUE	E.N. Nº	REVISION	CHECKED	DATE	ISSUE	E.N. Nº	REVISION	CHECKED	DATE

ITEM	PART Nº	DESCRIPTION	REQ.
MATERIAL: AS STATED		RALPH McKAY LIMITED–COMPONENTS DIVISION	
		TITLE INSULATOR	
DO NOT SCALE		USED ON	
		DRAWN RGM 13-3-79	REQUIRED
THIRD ANGLE PROJECTION		CHECKED	SCALE 1:1
		APPROVED	PART Nº EX-4844

PART Nº EX-4842

3RD ANGLE PROJECTION

TOLERANCE ON DIMENSIONS UNLESS OTHERWISE SPECIFIED
LINEAR ± 1·0mm
ANGULAR ± 1°
DRILL AND PUNCHED HOLE DIAMETERS ± 0·5mm

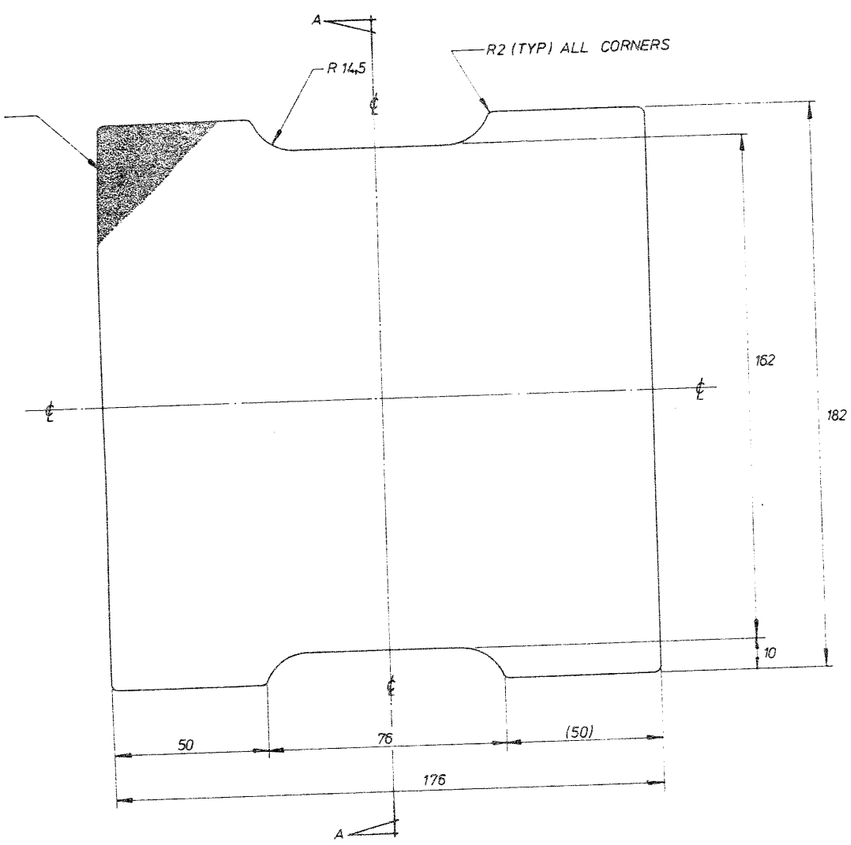

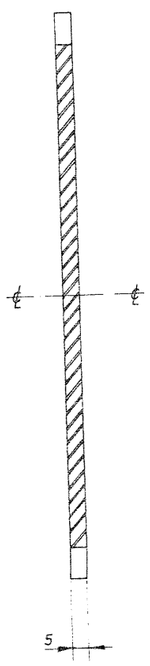

SECTION A-A

CONFIDENTIAL
T.D. 22 Aug. 79
E.

App.6

McKAY "SAFELOK" RAIL FASTENING SYSTEM

ISSUE	E.N. Nº	REVISION	CHECKED	DATE	ISSUE	E.N. Nº	REVISION	CHECKED	DATE

ITEM	PART Nº	DESCRIPTION	REQ.

MATERIAL: HIGH DENSITY POLYETHYLENE (BLACK)

RALPH McKAY LIMITED – COMPONENTS DIVISION

TITLE: RESILIENT PAD – 68 kg/m AREA RAIL

DO NOT SCALE

THIRD ANGLE PROJECTION

USED ON

DRAWN: RGM 27-6-79

CHECKED

APPROVED

REQUIRED

SCALE: 1 : 1

PART Nº: EX-4842

LOAD - DEFLECTION - CHARACTERISTICS

(clips A28 and A39)

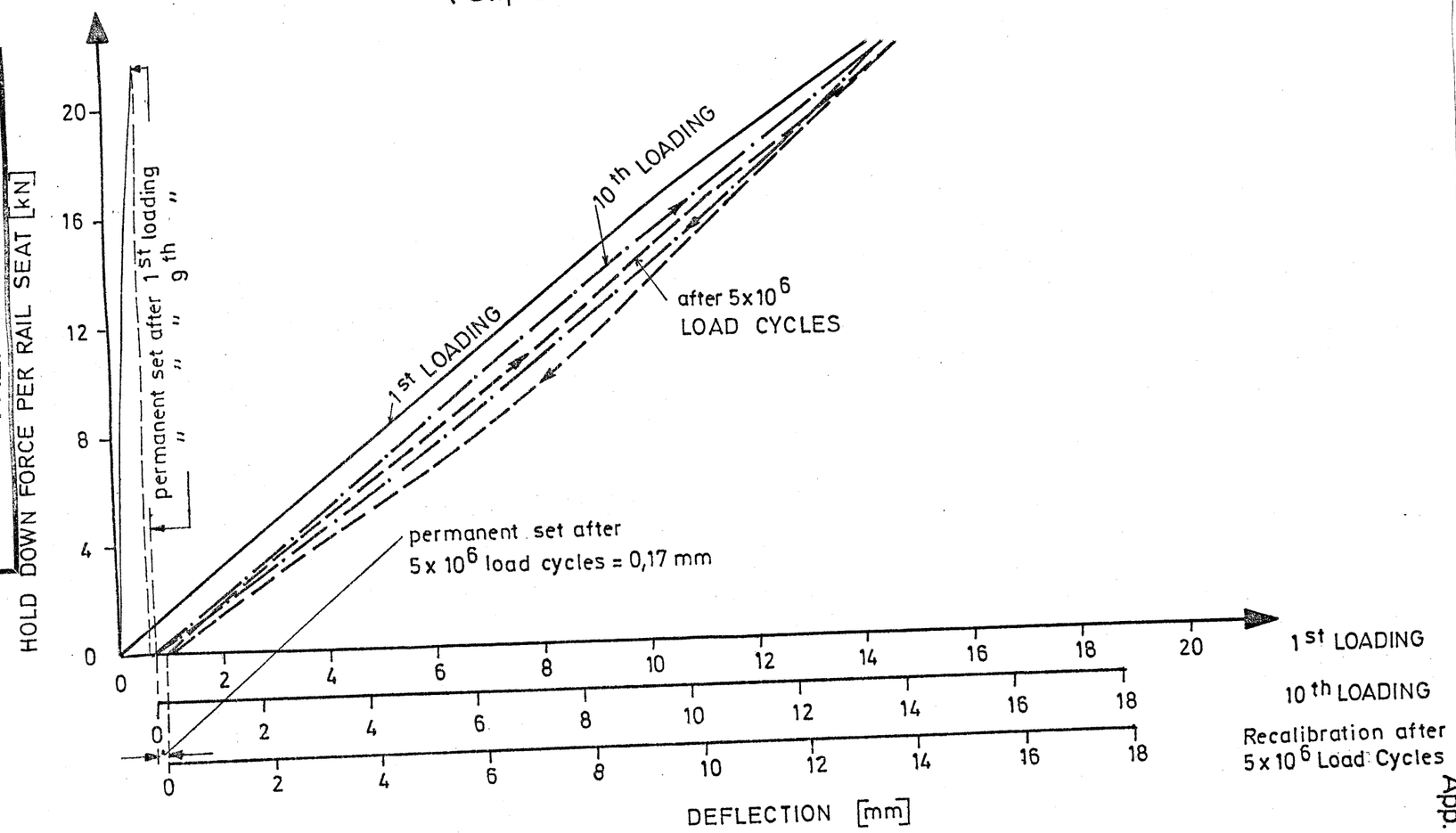

2 Aug. 79

App. 7

LOAD - DEFLECTION - CHARACTERISTICS

(clips D14 and X23)

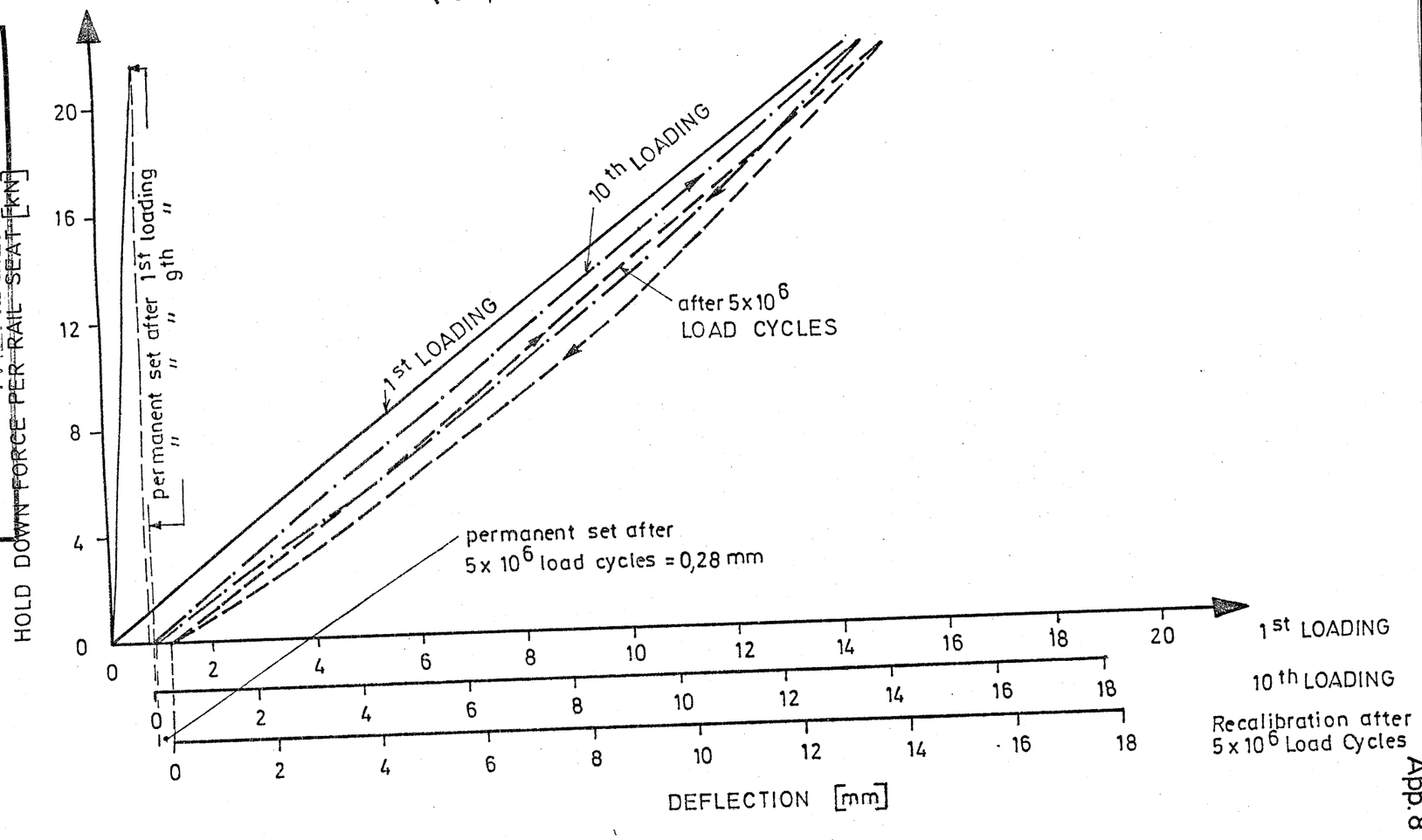

App. 8

LOAD - DEFLECTION - CHARACTERISTICS

(clips D13 and C36)

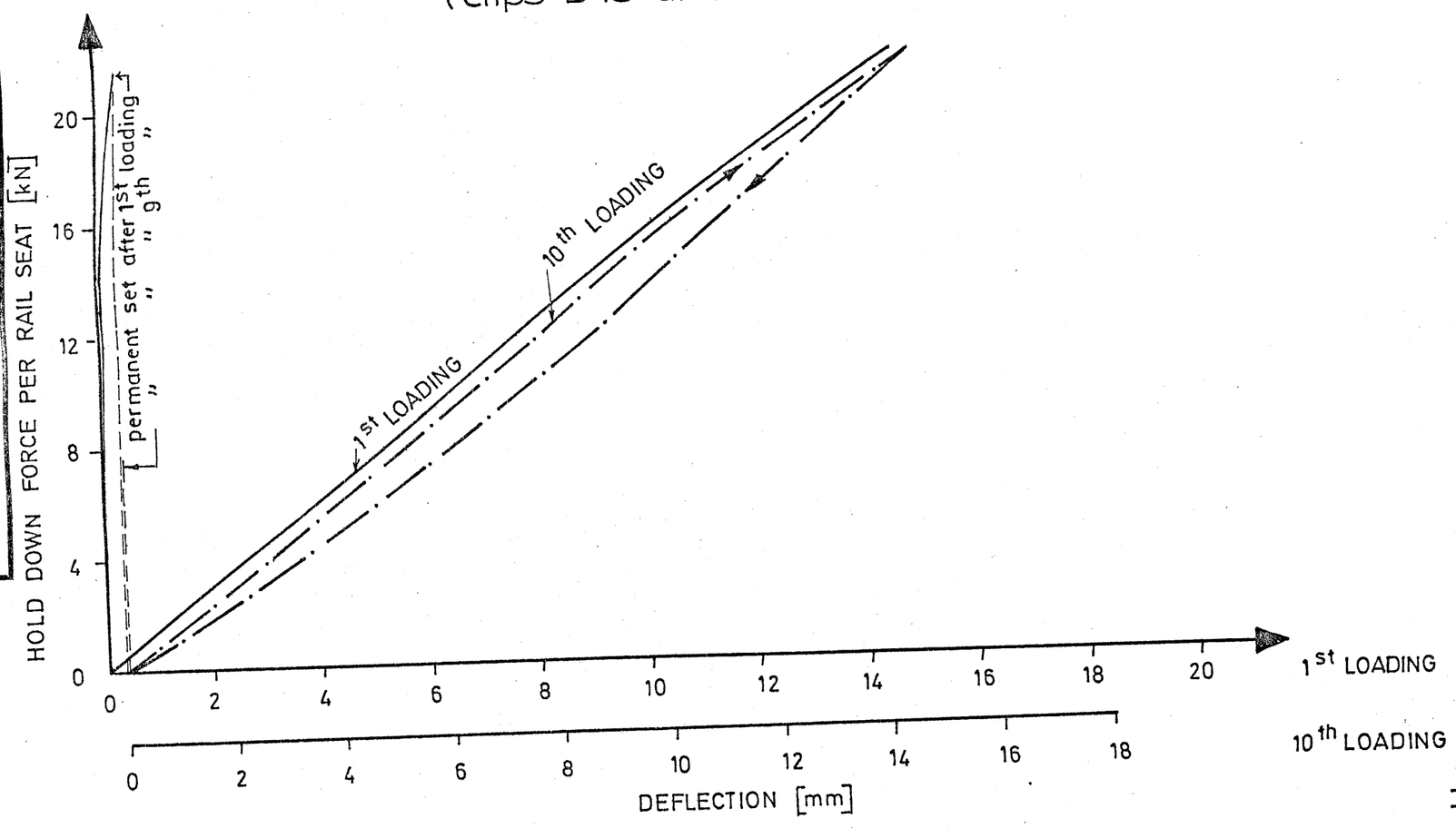

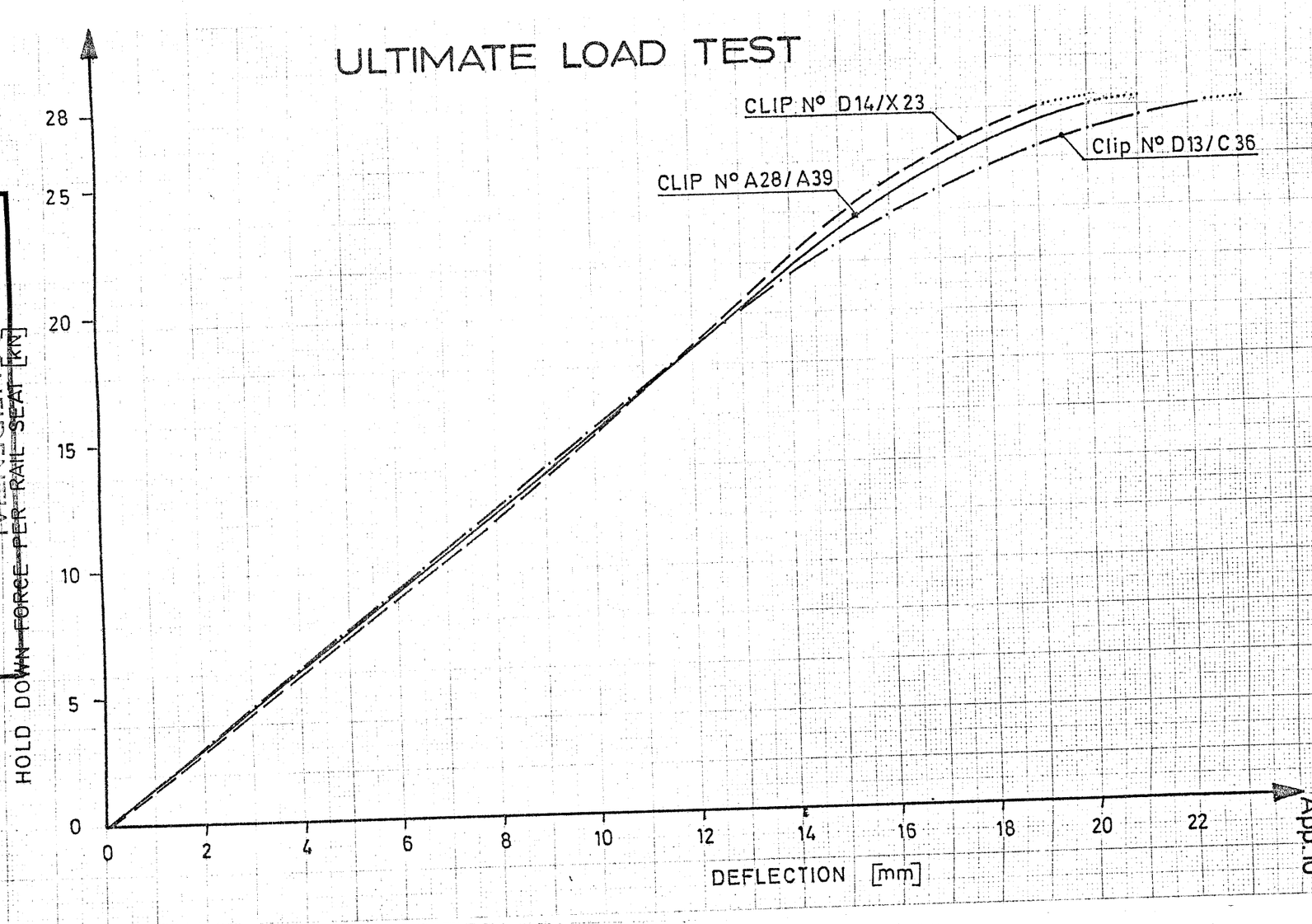

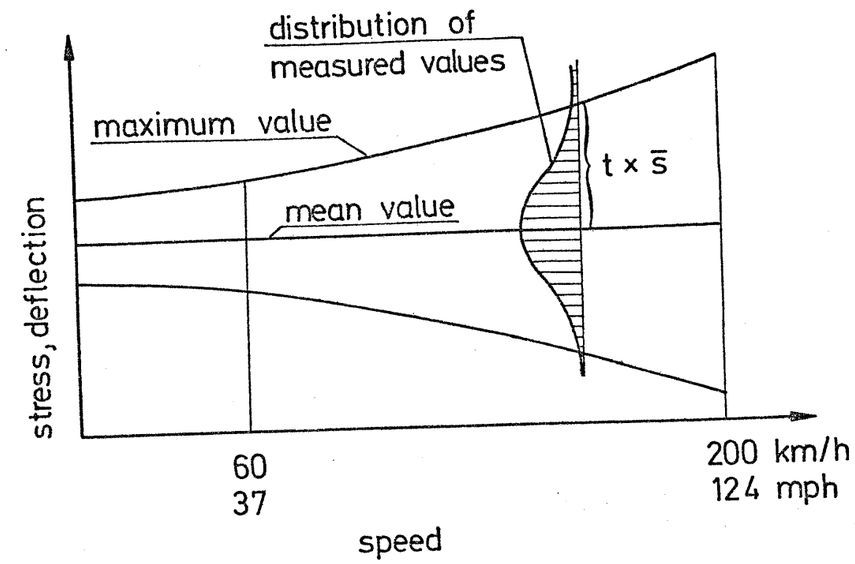

$$\boxed{\text{maximum value} = \text{mean value} \times (1 + t \times \bar{s})}$$

$\bar{s}$ = standard deviation of mean value

permanent way in very good condition	$\bar{s} = 0{,}1 \times \varphi$
permanent way in good condition	$\bar{s} = 0{,}2 \times \varphi$
permanent way in bad condition	$\bar{s} = 0{,}3 \times \varphi$

φ = influence of speed:

$V < 60$ km/h (37mph) : $\varphi = 1$

$60 < V < 200$ km/h (124mph) : $\varphi = 1{,}0 + \frac{V-60}{140}$; $\left(1{,}0 + \frac{V-37}{87}\right)$

t = factor, depending on statistical confidence interval P

P = 68,3 %	t = 1
P = 95,4 %	t = 2
P = 99,7 %	t = 3

TU München	Mean value and scattering of measurements in function of the speed	App. 11

CALIBRATION OF PAD No. 1

Loading Area A=175mm x 152mm = 26 600mm²

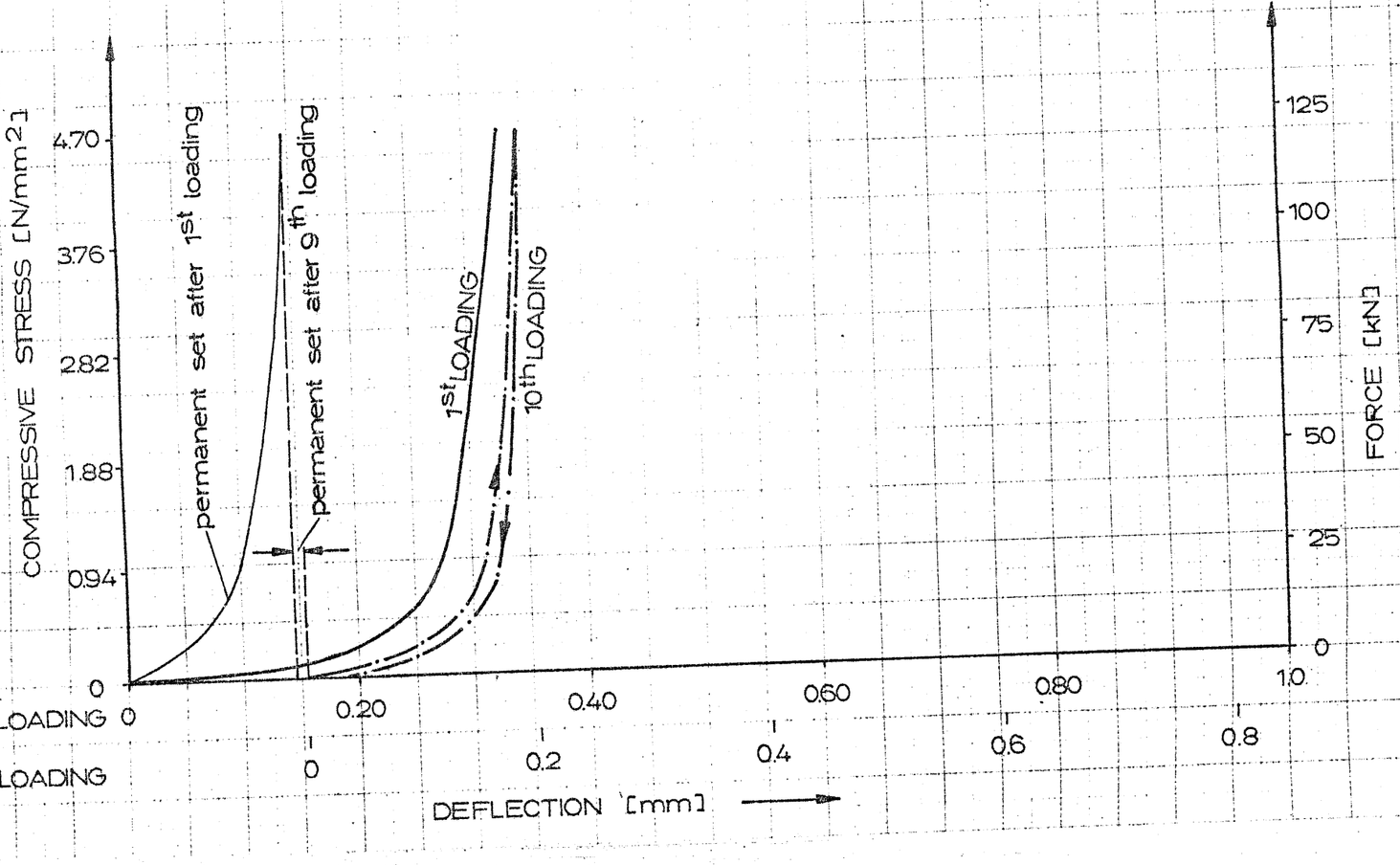

CALIBRATION OF PAD No.2

Loading Area A=175mm x 152mm = 26 600mm²

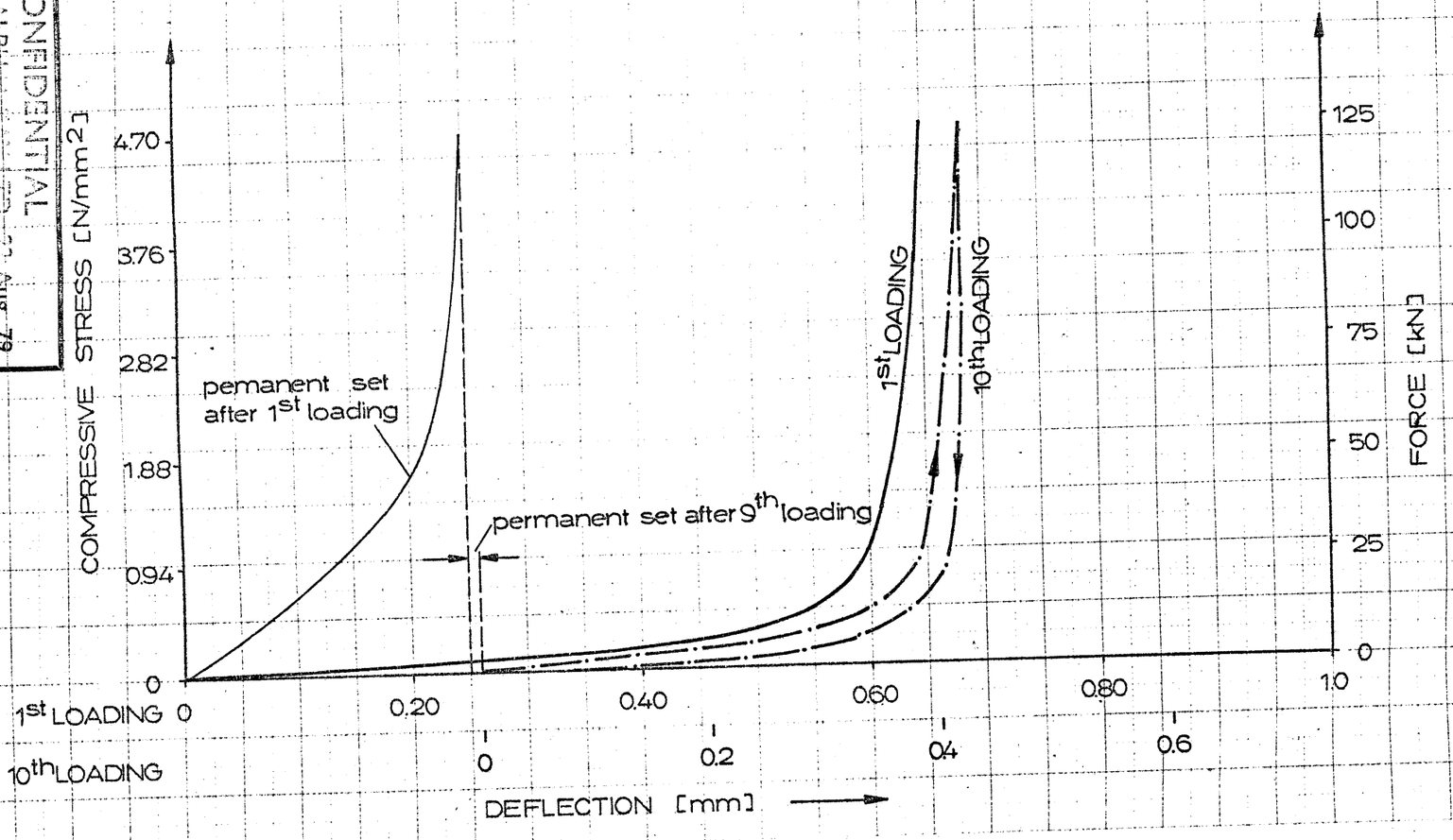

App. 13

FASTENING SYSTEM PULSATING LOAD TEST

Equivalent Curve Radius 300 m

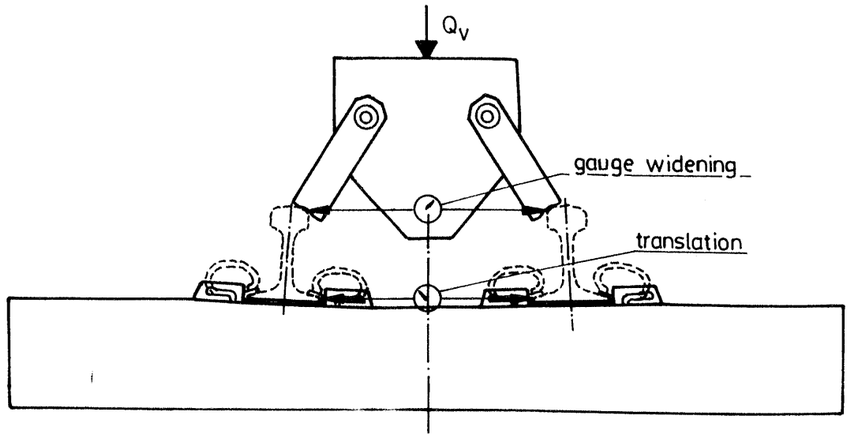

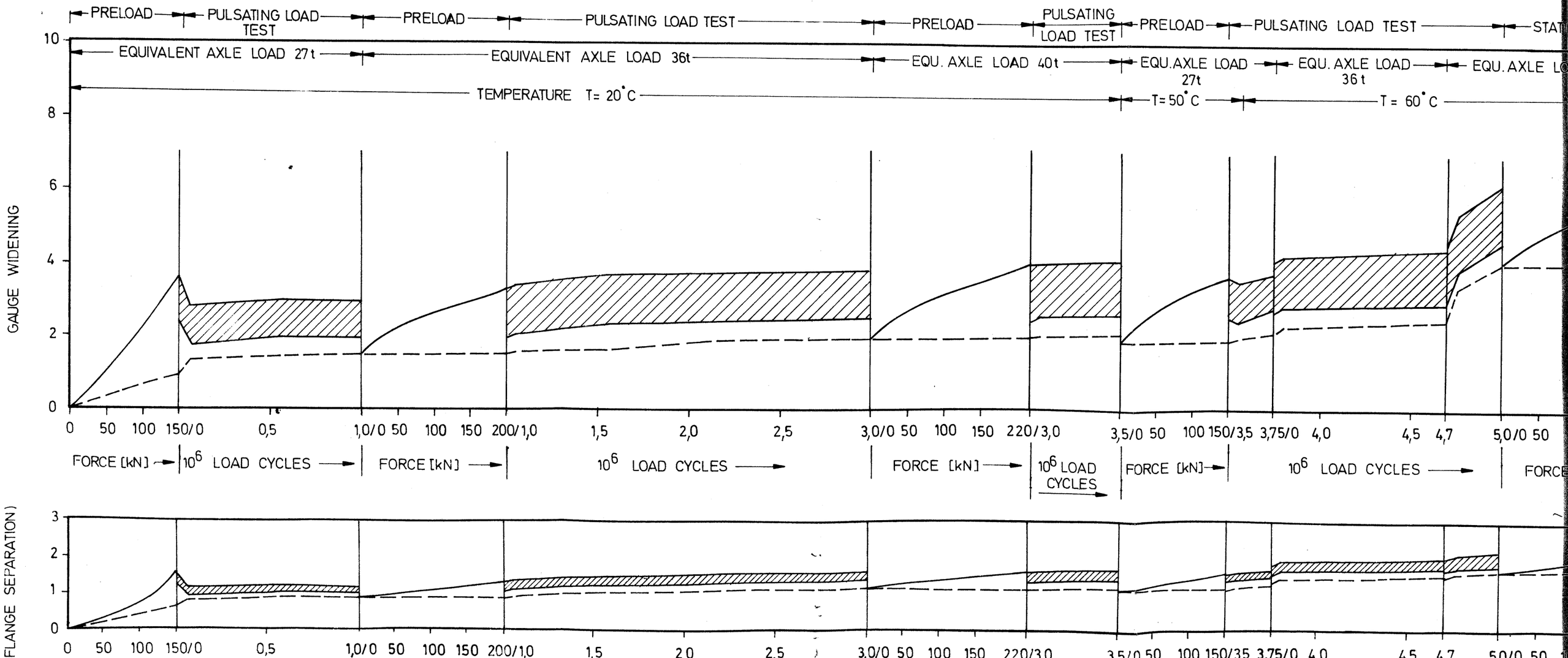

FASTENING SYSTEM PULSATING LOAD TEST

Equivalent Curve Radius 300 m

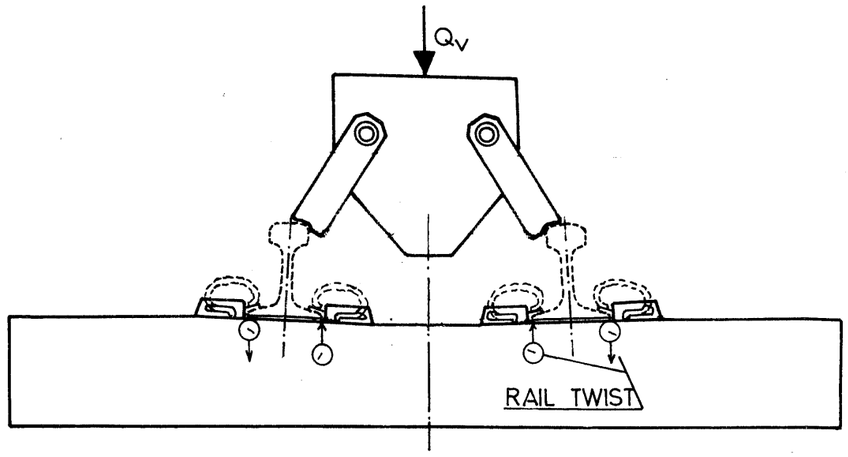

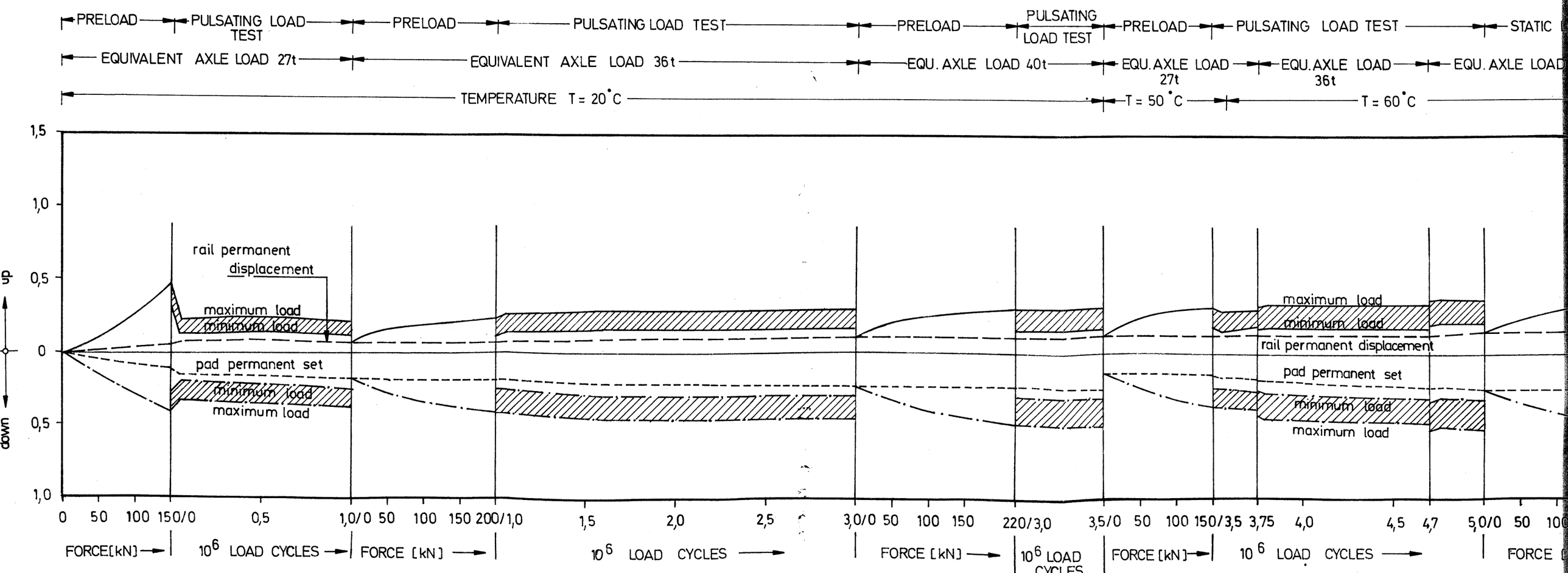

CREEP TESTS

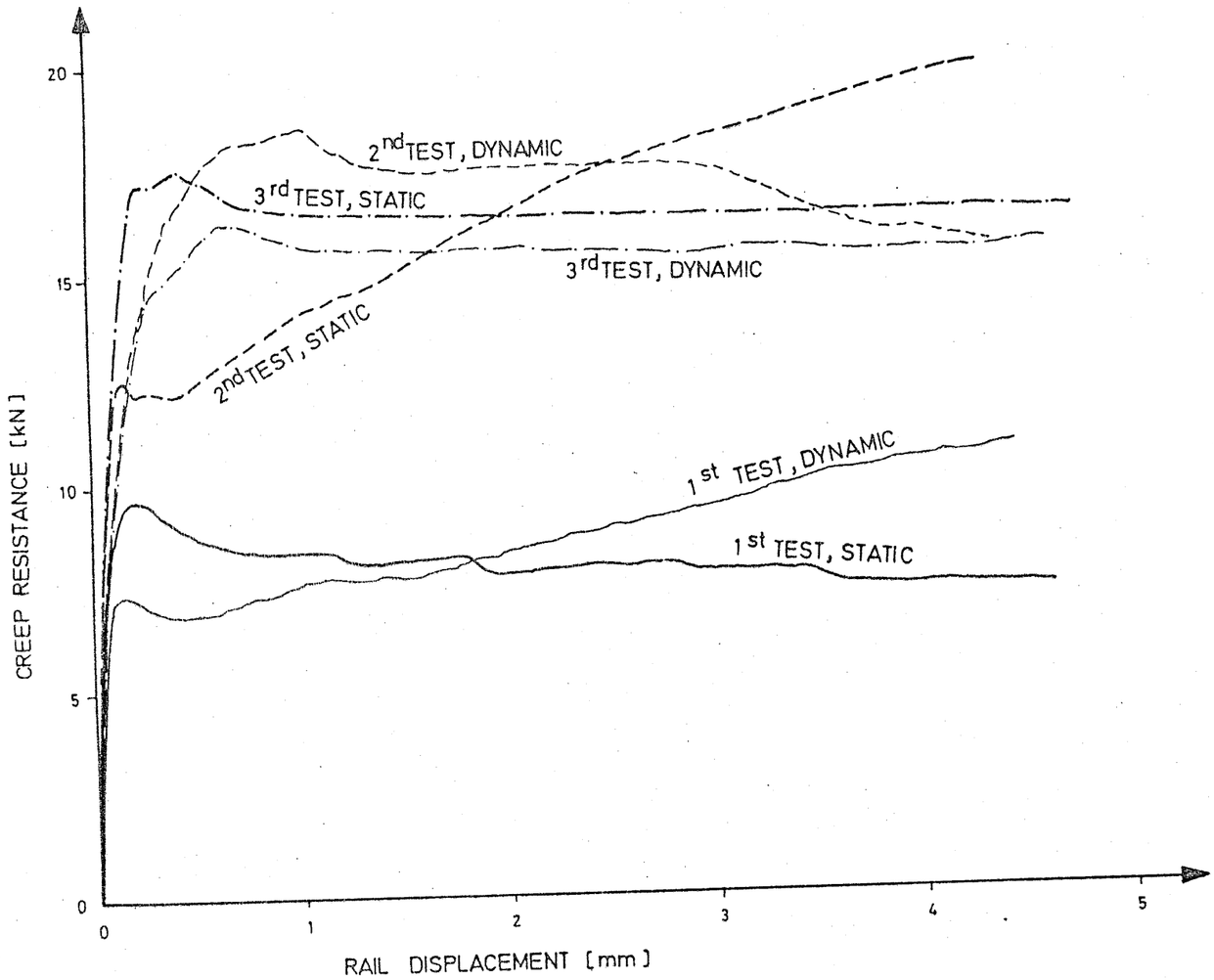

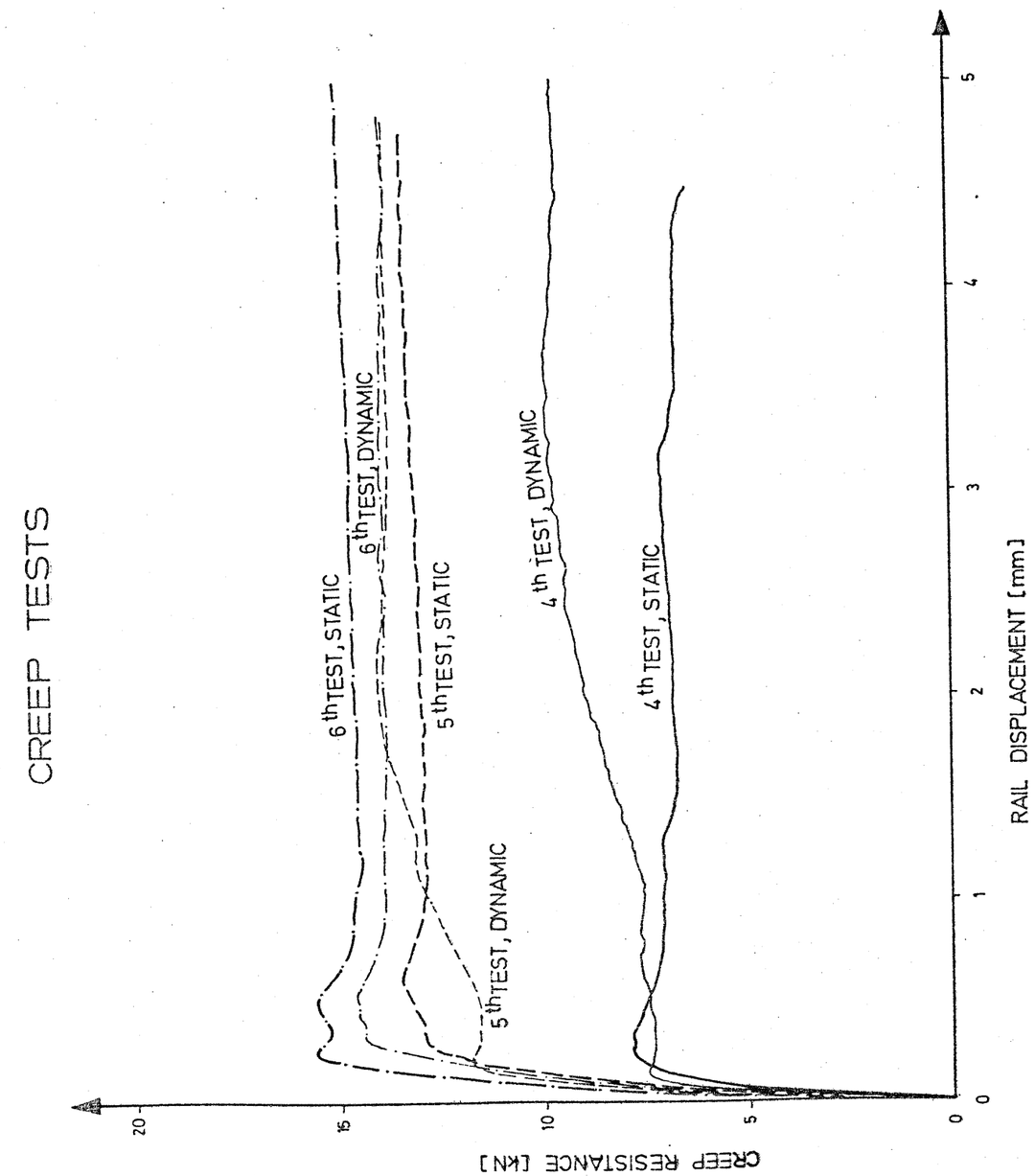

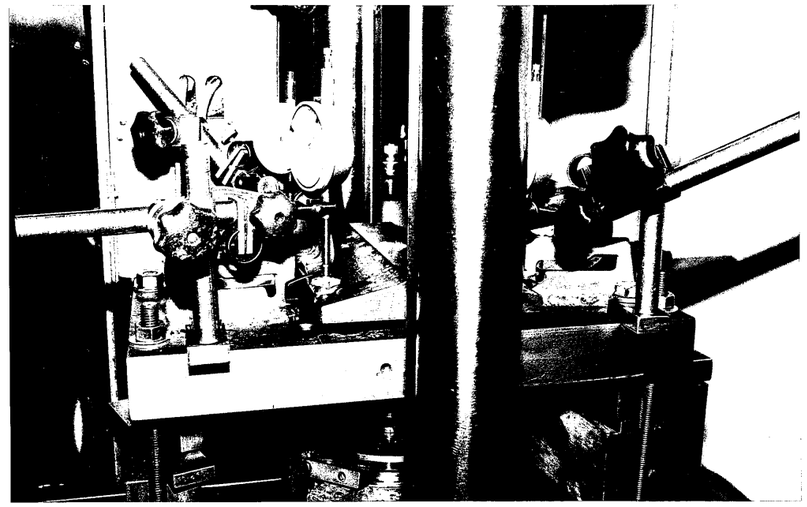

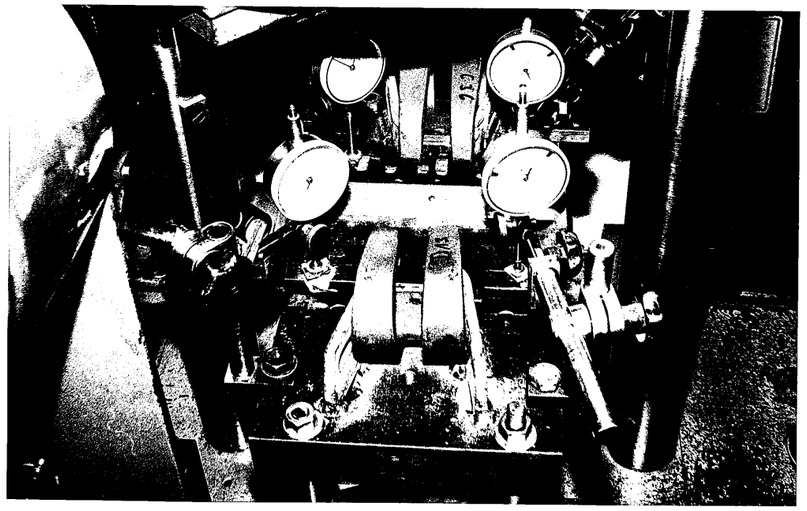

CLIP FATIGUE TESTS

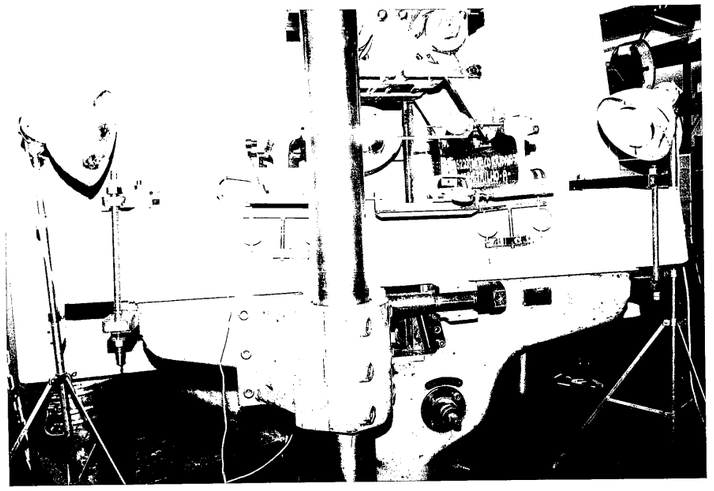

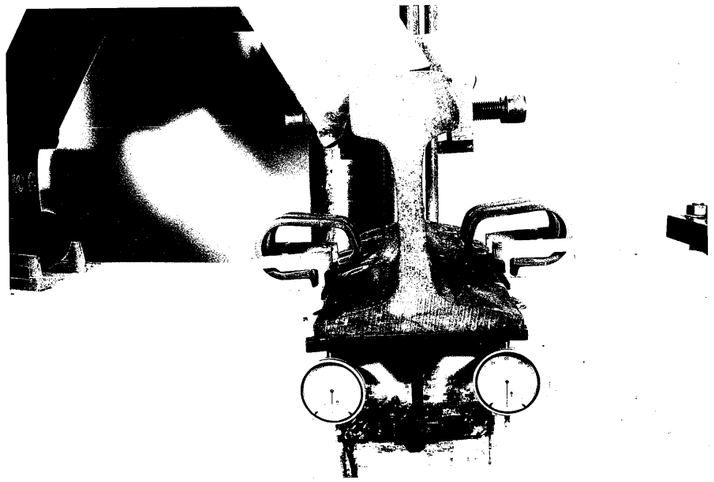

FASTENING SYSTEM PULSATING LOAD TEST
(Test phase with rail temperature elevated up to 60 °C)

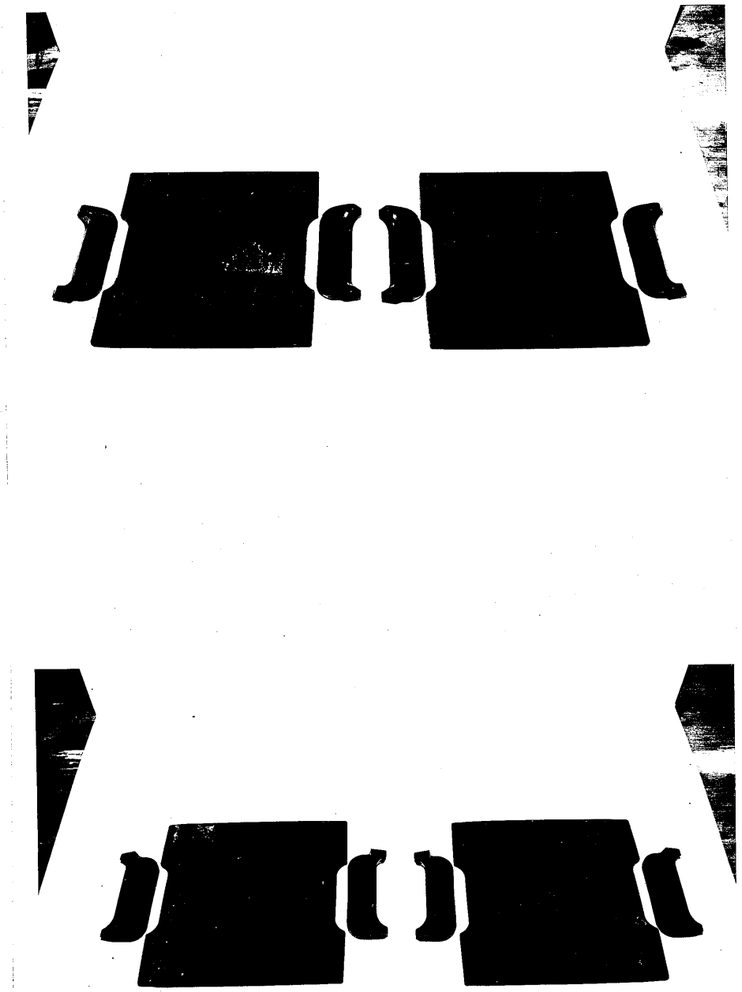

Surface and bottom of pads and insulators after completion of the fastening system pulsating load test

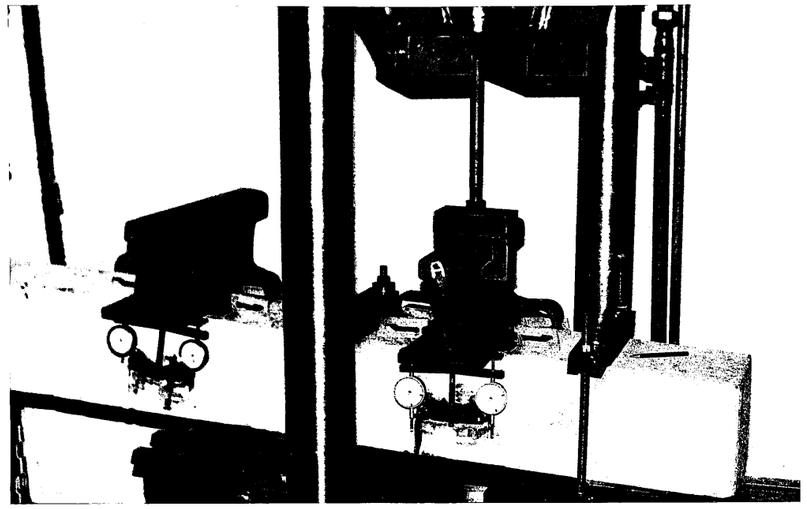

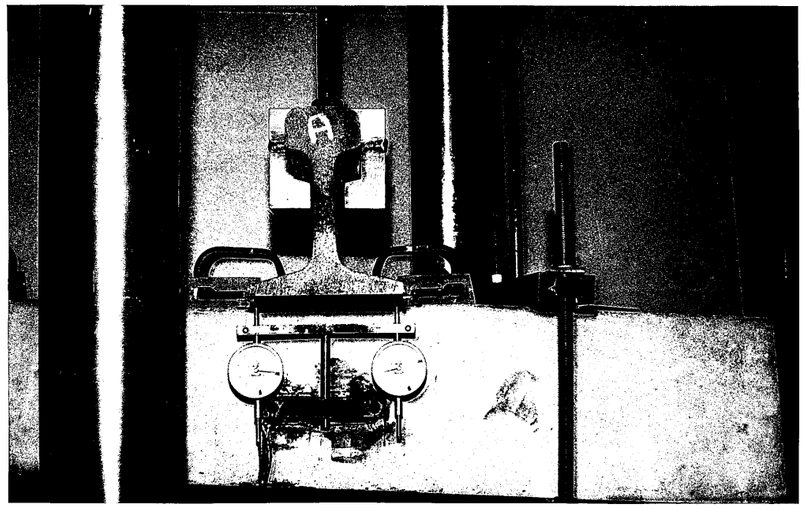

FASTENING SYSTEM UPLIFT TEST

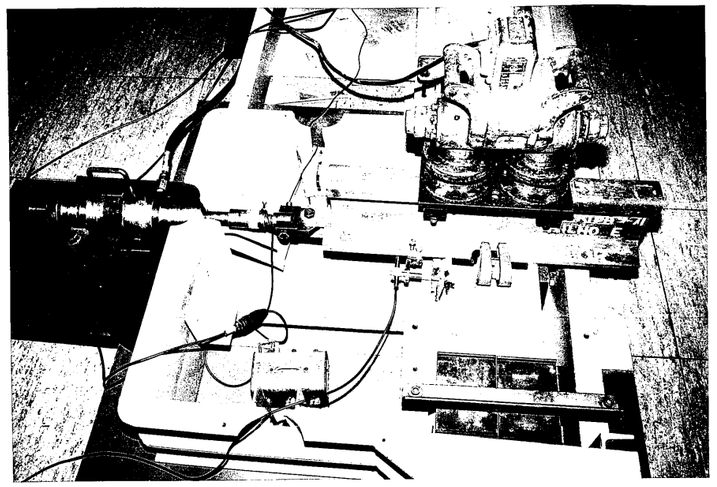

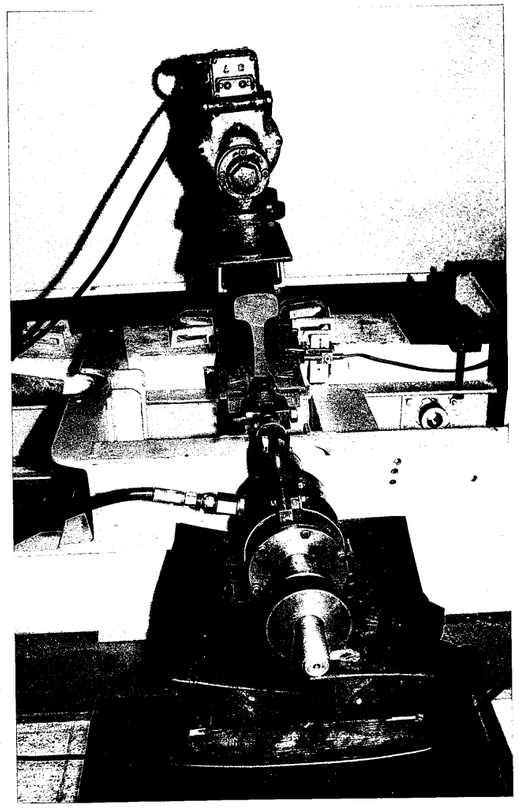

FASTENING SYSTEM LONGITUDINAL RESTRAINT TEST