Engineering Failure Analysis 94 (2018) 354–363

Contents lists available at ScienceDirect

Engineering Failure Analysis

journal homepage: www.elsevier.com/locate/engfailanal

Laboratory analysis of track gauge restraining capacity of center-cracked railway concrete sleepers with various support conditions

Josué César Bastos[a,b,c,*], J. Riley Edwards[a,b], Marcus S. Dersch[a,b], Bassem O. Andrawes[a]

[a] Department of Civil and Environmental Engineering, University of Illinois at Urbana-Champaign, 205 N Mathews Ave, Urbana, IL 61801, USA
[b] Rail Transportation and Engineering Center – RailTEC, Department of Civil and Environmental Engineering, University of Illinois at Urbana-Champaign, 1239B Newmark Engineering Laboratory, MC-250. 205 N. Mathews Ave, Urbana, IL 61801, USA
[c] CAPES Foundation, Ministry of Education of Brazil, Brasilia, DF 70.040-020, Brazil

ARTICLE INFO

Keywords:
Railway engineering
Cracks
Deflection

ABSTRACT

As the number of concrete railway sleepers has steadily grown in North America, the importance of understanding the performance and failure of these components has also increased. Concrete sleepers typically perform better than timber sleepers to maintain track geometry and have a longer expected service life. Nevertheless, there have been derailments that were caused by excessive increase of track gauge due to deteriorated concrete sleepers and fastening systems. As ballast support conditions are closely related to sleeper performance, there is a need to fully understand the behavior of poorly supported sleepers. To quantify the influence of support conditions on sleeper deflection and gauge widening, laboratory experiments were performed. Using a static structural loading frame, new and center-cracked concrete sleepers were subjected to different support conditions, engineered using rubber pads. Simulated conditions included center bound sleepers, newly tamped track, and track under high impact loads. This paper presents a correlation between ballast support conditions and their effect on concrete sleeper health and track gauge. Using statistical tools to analyze the experimental results, it is shown that there is no significant difference between new sleepers and lightly center-cracked sleepers. Even extreme deterioration at the sleeper center has little influence on the gauge widening effect due to sleeper bending. Moreover, the gauge widening effect due to pure concrete sleeper bending seemed to be minimal, but not insignificant when compared to the amount of track gauge increase due to other track infrastructure conditions. Therefore, railway accidents where damaged concrete sleepers fail to restrain track gauge are more likely to be related to the rail seat, fastening system, or other production problems rather than center cracking.

1. Introduction

In the United States, the use of concrete railway sleepers has increased steadily over the past decade as concrete sleepers have emerged as an economic alternative to timber sleepers to accommodate heavy axle freight train loads [1]. As the number of concrete railway sleepers has grown, the importance of understanding the performance and failure of these components has also increased.

* Corresponding author at: Department of Civil and Environmental Engineering, University of Illinois at Urbana-Champaign, 205 N Mathews Ave, Urbana, IL 61801, USA.

E-mail addresses: cesarba2@illinois.edu (J. César Bastos), jedward2@illinois.edu (J.R. Edwards), mdersch2@illinois.edu (M.S. Dersch), andrawes@illinois.edu (B.O. Andrawes).

https://doi.org/10.1016/j.engfailanal.2018.08.018
Received 28 June 2017; Received in revised form 15 August 2018; Accepted 17 August 2018
Available online 19 August 2018
1350-6307/

Although not as frequent as the accidents caused by defective timber sleepers, derailments have been related to deteriorated concrete sleepers and fastening systems leading to wide track gauge [2]. Further, an analysis of the U.S. Federal Railroad Administration (FRA) accident database, an industry survey, and additional literature review indicate the need to better understand the gauge restraining capacity of deteriorated concrete sleepers, especially when associated with poor track support conditions [2]. Using laboratory data, this paper focuses on correlating sleeper center cracks and various track support conditions with the potential track gauge widening.

1.1. Functions, design, and failure of concrete sleepers

To further comprehend the problems of concrete sleepers, it is useful to understand their functions within the railroad track. Any condition that results in sleepers being unable to serve these functions are considered a defective condition. According to Zeman [3], the roles of railroad sleepers are:

- Supporting the rails under load;
- Distributing the stresses at the rail seat to acceptable levels for the ballast layer;
- Maintaining proper geometry of the track structure.

Maintaining proper geometry of the track structure is not an exclusive role of sleepers, but a shared responsibility with other track elements and components [3]. Nevertheless, even though sleepers restrict the lateral and vertical movements of the track, perhaps their most relevant contribution to maintaining track geometry is to maintain the track gauge with the assistance of rail fastening systems. Various research efforts focus on reporting the failure mechanisms of concrete sleepers [4–6], but do not necessarily map them to a failure of fulfilling the basic functions of these components. Therefore, this work focuses on answering the question of when the studied defects would lead to a train derailment or pose some other tangible risk.

Since the actual fulfillment of the concrete sleeper's function is closely related to their structural design process, it is pertinent to understand the common practices of concrete sleeper design. In addition, even though concrete sleepers can be monoblock or twin-block, the latter are outside the scope of this study as they are not commonly used in North America [7]. There are two prominent methods of designing concrete sleepers: the maximum allowable stress approach and the limit states approach. The allowable stress method “ensures that all stresses within the sleeper do not exceed predetermined values” [8], which could lead to an uneconomical scenario by over-designing sleepers [9]. The limit state methods also require that the design resistance must be greater than the “effect of design loads” [10]. The main difference, however, lies in using maximum probable loads believed to occur in a given time period [10] (as opposed to factoring input loads), often leading to more economical designs. There can be many simultaneous limit states, such as serviceability limits of tolerable deformations, acceptable cracking, and maximum vibration. For instance, Murray recommends four limit state categories for concrete sleepers, namely: strength, operations, serviceability, and fatigue [8]. One advantage of the limit states methods is the fact that mapping the failure modes is a key factor considered from the beginning of the design process. When developing limit states for concrete sleepers, Leong provides one of the most complete lists of defective conditions that would cause these components to fail [9]. A modified version of this list is shown below:

Bottom abrasion that allows for excessive gauge widening due to bending deformation;

Rail seat deterioration (RSD) that allows for excessive gauge widening due to rail rotation;

Cracking that allows for the movement of the fastening systems, increasing in track gauge (e.g. severe rail seat or longitudinal cracking);

Cracking that allows for excessive gauge widening due to bending deformation (e.g. severe center or longitudinal cracking);

Chemical degradation (e.g. alkali silica reactivity (ASR)).

Therefore, it seems that most failures of concrete sleepers are not related to their functions of supporting the rails or transmitting the loads to the ballast, but with its role of restraining track gauge. However, to successfully restrain track gauge, effective rail fastening systems are also required. Even though fastening systems are not the focus of this work, it is important to highlight that defective conditions fastening systems rarely require the removal of sleepers. An exception to this statement are worn or broken fastening system parts that are cast in the concrete sleeper. For example, a sleeper with worn shoulders may no longer be able to restrain gauge, which could lead to the replacement of the complete sleeper given most shoulder designs cannot be easily replaced or repaired.

1.2. Background on gauge widening in railroad track

Gauge widening is typically caused by rail wear, rail roll, worn fastening systems, rail cant deficiency, or broken or bent sleepers, and it contributes to wheel-drop derailments, especially in the presence of worn wheels [11]. For a wheel-drop derailment to occur, the track gauge must be greater than some gauge equivalent dimension of the wheelset. Therefore, some basic wheelset dimensions need to be understood to determine what this gauge equivalent dimension is. Fig. 1 shows the standard wheel dimensions as defined by the Association of American Railroads (AAR) [12]. The two most relevant measurements for this analysis are the flange thickness and the rim width, which are respectively called “B” and “L” in this figure. The distance between two wheels on the same axle, measured at the back of the wheel flanges, is commonly referred as “back-to-back” dimension and will be abbreviated as “BB” in this study.

Therefore, a wheel-drop derailment could happen in less severe conditions where the track gauge is greater than the sum of the thickness of one wheel, the back-to-back distance, and the flange thickness of the other wheel (L + BB + B dimension), as shown in

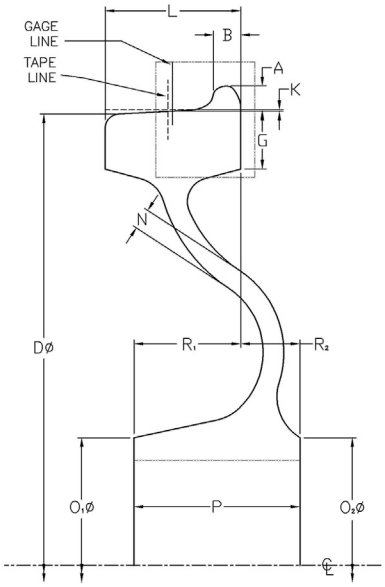

	Standard Wide Flange Dimensions and Tolerances	Standard Narrow Flange Dimensions and Tolerances
A	1 $^{+1/16}_{-0}$	1 $^{+1/16}_{-0}$
B	1 3/8 $^{+1/32}_{-3/32}$	1 5/32 $^{+1/16}_{-0}$
L	5 23/32 ± 1/8	5 23/32 ± 1/8
		(5 1/2 ± 1/8 alternate)
Pa/	7 ± 1/4	See Note
R2	2 1/2 ± 1/8	See Note
K	0.0865	0.0663

a/ Except A-28 = 7 ± 1/8

Fig. 1. Regular wheel dimensions (inches) [12].

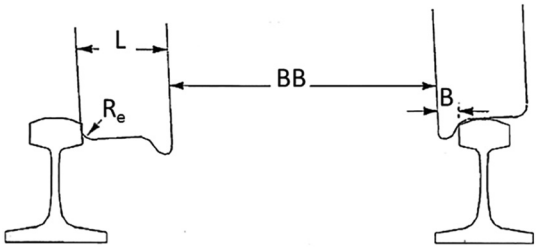

Fig. 2. Critical dimensions to access the risk of gauge widening derailment.
(adapted from [13]).

Fig. 2.

Considering mounting and manufacturing tolerances, worn wheels can have flange thicknesses as narrow as seven eighths of an inch (22.23 mm) [14,15]. In addition, the minimum tolerable back-to-back distance is 52 $^{15}/_{16}$ in. (1344.6 mm) under field conditions [16]. These circumstances could result in a value L + BB + B of 59.53 in. (1512.1 mm), which is 3.03 in. (77.0 mm) greater than the standard track gauge. However, this analysis must also account for the radius of the edge of the wheel (R_e in Fig. 2), which can be as large as 0.75 in. (19.1 mm) [12]. By subtracting 0.75 from 3.03, the critical track gauge increase would be 2.28 in. (57.9 mm), number that is slightly less than the 2.5 in. (63.5 mm) proposed by [13].

With the objective of providing reference values for potential increases in track gauge resulting from various track infrastructure conditions, Table 1 is presented. Even though gauge widening due to one of these track infrastructure conditions would not likely cause a derailment in and of itself, the combined effect of these conditions could lead to a derailment. Therefore, it is important to account for as many variables as possible, adding other conditions to this table, such as bending of deteriorated sleepers.

It is also important to consider the regulatory restrictions of track gauge increase. In the U.S., the FRA limits gauge widening based on the class of track as listed in Table 2. Additionally, the FRA defines railroad track gauge as being the distance "measured

Table 1
Estimate of track gauge increase due to various track infrastructure conditions [17–20].

Track infrastructure condition	Estimated maximum track gauge increase inches (mm)	Citation
Concrete sleeper manufacturing tolerance	0.0625 (1.588)	[17]
Sleeper RSD tolerance[a]	1.130 (28.702)	[18]
Rail manufacturing tolerance	0.125 (3.175)	[17]
Rail wear tolerance	0.6 (15.24)	[19]
Maximum tolerable rail lateral movement allowed by fastening systems	0.5 (12.7)	[20]

[a] The FRA track safety standards allows for 0.5 in. of RSD [20], which, based on [18], could lead up to 1.13 in. (28.70 mm) of gauge widening for the worst-case scenario with rail profile 136 RE.

Table 2
FRA limits for increase in track gauge [20].

FRA Class of Track	Maximum allowable speed freight/passenger trains mph (km/h)		Maximum allowable track gauge increase inches (mm)	Maximum allowable change of track gauge within 31 ft inches (mm)
Excepted	10/-	(16/-)	1.75 (44.45)	–
1	10/15	(16/24)	1.50 (38.10)	–
2	25/30	(40/48)	1.25 (31.75)	–
3	40/60	(64/97)	1.25 (31.75)	–
4	60/80	(97/129)	1.00 (25.40)	–
5	80/90	(129/145)	1.00 (25.40)	–
6	110/110	(177/177)	0.75 (19.05)	0.75 (19.05)
7	125/125	(201/201)	0.75 (19.05)	0.50 (12.70)
8	160/160	(257/257)	0.75 (19.05)	0.50 (12.70)
9	220/220	(354/354)	0.75 (19.05)	0.50 (12.70)

between the heads of the rails at right angles to the rails in a plane five-eighths of an inch below the top of the rail head" [20]. In the U.S., as is the case in many other countries, standard track gauge is 56.5 in. (1435 mm). Based on Table 2, the previously-mentioned gauge widening value of 2.28 in. (57.9 mm) is larger than what is allowed by the FRA for any track class.

2. Experimentation plan

With the objective of quantifying the influence of support conditions on concrete sleeper bending deflections, laboratory experiments were performed. Individual concrete sleepers were placed in a loading frame where both rail seats could be simultaneously loaded in the vertical direction (Fig. 3).

To compute the vertical displacements along the sleeper, linear potentiometers (resistive position transducers) were used. Each sleeper was monitored with 15 potentiometers: one at the sleeper center and seven symmetrically located on each side. Similarly, the support and loading conditions used in this experiment were always symmetric. Having both sides of the sleeper instrumented increased the sample size to further account for the variability associated with different support and sleeper conditions.

Both rail seats of a single sleeper were simultaneously loaded with equal vertical forces up to 20 kips (89 kN). A wheel load of 40 kips (177.9 kN) provides an approximate representation of the 95th percentile nominal wheel load for loaded freight cars in the U.S., based on a representative sample of railcars in unrestricted interchange on a Class I railroad [21]. A single sleeper bears approximately 50% of the axle load applied directly above it assuming 24 in. (610 mm) sleeper spacing [17]. Therefore, loading up to 20 kips (89 kN) approximates the 95th percentile nominal rail seat load imparted by a loaded freight car in the U.S.

As ballast support conditions are closely related to sleeper performance [22], this is one of the controlled variables in this study. The sleepers were supported by rubber pads simulating various revenue service support conditions (Fig. 4). The "full support" condition is the baseline scenario where a uniform and homogenous layer of ballast is represented by pads placed under the entire length and width of the sleeper. Three variations of "center binding" were simulated in the experiments, with the most severe case having the shortest length of support pads under the sleeper center. The arrangement for "lack of rail seat support" takes into consideration the fact that, under field conditions, the ballast below the rail seat typically degrades faster than other areas under the sleeper due to impact loads resulting from track or wheel irregularities. Finally, the "lack of center support" configuration assumes that the ballast does not provide significant support at the sleeper center area, which could represent newly tamped track. This

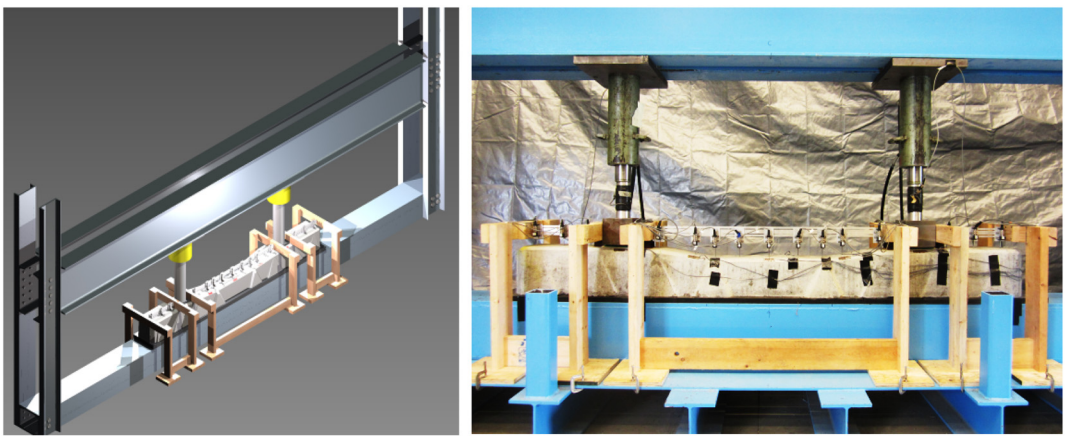

(a) (b)

Fig. 3. Rendering (a) and photograph (b) of loading frame with instrumented concrete sleeper.

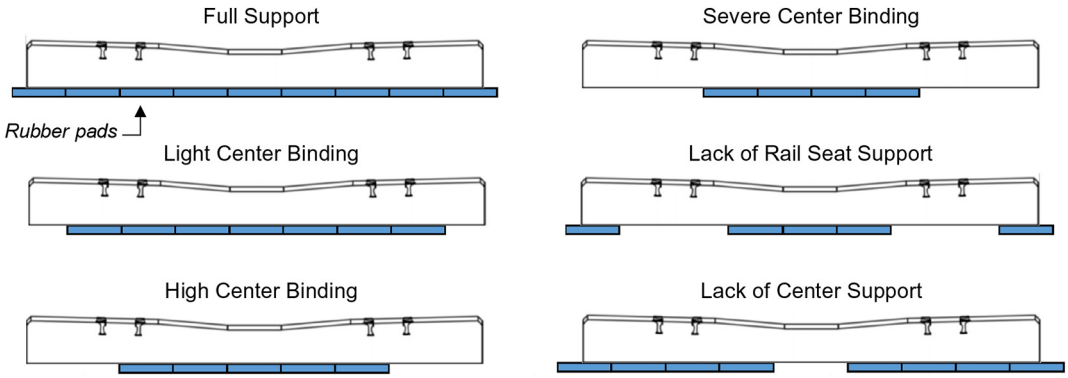

Fig. 4. Sleepers experimental support conditions with rubber pads.

condition is simulated by including pads only at the area reached by the tines of a tamping machine. All the pads were 1 in. (25.4 mm) thick, 12 in. (304.8 mm) wide, and 12 in. (304.8 mm) long, with a durometer hardness of 50 shore A. The authors were comfortable with the use of rubber pads as the absolute vertical displacements of the ends of fully supported sleepers were in the range of 0.05 to 0.1 in. (12.7 to 25.4 mm) under a 20-kip (89 kN) rail seat load at the laboratory, numbers comparable to recorded displacements measured in the field [23].

All experiments were conducted five times with un-cracked concrete sleepers and five times with center-cracked sleepers, all of the same design. The selected sleeper design represents a lower bound of center bending stiffness of modern concrete sleepers in the North American market for heavy axle load applications, which corresponds to Design 1 of the characterization work conducted by Bastos et al. [24]. The sleeper cracks were all generated in the laboratory by simultaneously loading both rail seats of a single sleeper with equal vertical forces up to 20 kips (89 kN) while the sleeper was supported with a severe center binding condition (Fig. 4). Typically, after cracking, each sleeper presented seven horizontal cracks that were symmetric about the sleeper midspan. All cracked sleepers had cracks going deeper than the first level of prestressing steel and the deepest cracks usually reached 3 in. (76.2 mm) of depth below the top center surface and 2 in. (50.8 mm) below the top level of prestressing steel (Fig. 5). It should be mentioned that when the load was removed, the cracks closed up as a result of the prestressing force. However, since the cracks were deeper than the first level of steel, the sleepers were considered to be failed according to the definition set forth within the AREMA center negative bending moment test [17]. For statistical purposes, one replicate will be associated with half of a sleeper in this study. Therefore, ten replicates were performed for each potentiometer location (excluding the center location), support condition, and sleeper health condition.

3. Results of experimentation

The resulting shape of the loaded sleepers were correlated to corresponding values of track gauge increase due to pure bending of concrete sleepers using Eq. 1, which was derived based on basic geometry concepts and is illustrated on Fig. 6 and Fig. 7. Eq. 1 is based on the rotation of the rail seat and does not consider the effect of vertical displacement of the sleeper in the estimation of gauge widening. If the sleeper is a continuous beam, the bending-induced displacements would tend to approximate the rails (gauge narrowing effect), even if only by a negligible amount. Therefore, the consideration of displacements has been omitted in Eq. 1 for conservatism and simplicity. In this study, moreover, gauge widening due to sleeper bending is considered to be the change in track gauge that is a result of the sleeper deformed shape. It is assumed that this deformed shape only depends on the rail seat load and the support conditions. The distribution of the vertical load within the rail seat would change with different fastening systems, but such effect would likely be negligible given the small rail base width. All gauge widening numbers presented in this study are based on the 136 RE rail profile and it is assumed that track gauge is measured five eights of an inch (15.875 mm) below the top of the rail [20].

$$\frac{1}{2}\Delta g = \sqrt{2\left[l^2 + \frac{r^2}{4}(1+\sin^2\varphi)\right](1-\cos\theta)} \times \sin\left\{\arctan\left[\frac{l}{\frac{r^2}{4}(1+\sin^2\varphi)}\right] arctan\left(\frac{l}{r/2}\right) + \varphi - \frac{\theta}{2}\right\}$$

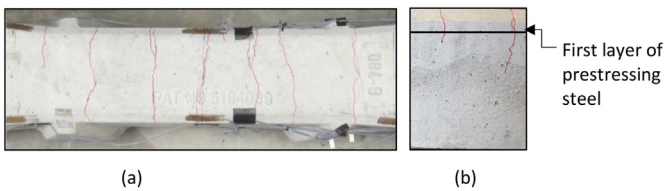

Fig. 5. (a) Plan view of sleeper cracks created in the laboratory; (b) Profile view of cracks with highlighted location of first level of prestressing steel.

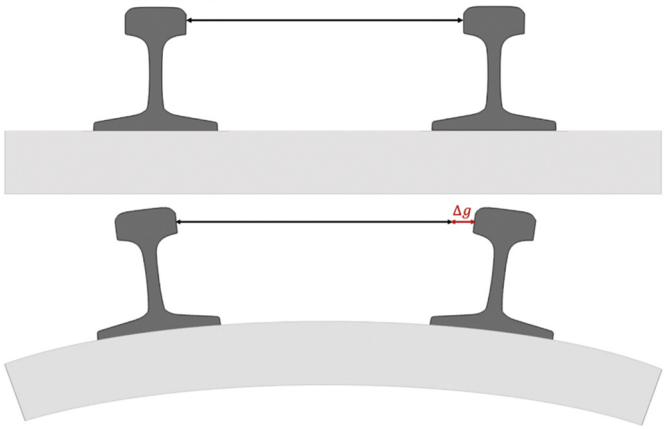

Fig. 6. Change in track gauge (Δ*g*) due to pure sleeper bending.

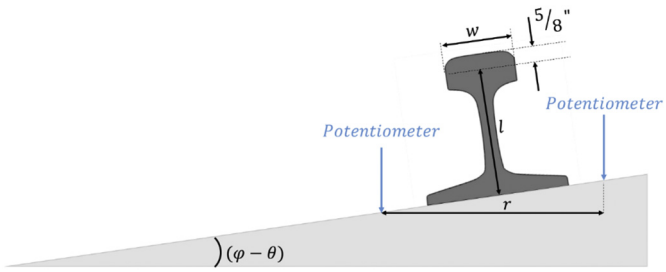

Fig. 7. Variables of Eq. 5.1 used to calculate gauge widening.

$$+\frac{w}{2}[\cos(\varphi-\theta)-\cos\varphi] \tag{1}$$

where,

Δg: Change of gauge due to sleeper bending.

l: Rail height at gauge measurement location.

r: Distance between the two potentiometers located on either side of the rail seat.

φ: Rail cant angle.

w: The width of rail head at gauge measurement location.

θ: Induced rail rotation angle:

$$\theta=\arctan\left(\frac{\Delta d}{r-\Delta d\tan\varphi+r\tan^2\varphi}\right) \tag{2}$$

Δd : Difference between the displacement readings of the two potentiometers located on either side of the rail seat.

To guide the process of data analysis and account for experimental variability, a statistical model was developed using the concept of completely randomized design (CRD) with two factors, as shown in Eq. 3 [25]. For easier reading, Eq. 3 uses Latin letters that are associated with their meaning (as opposed to the exclusive use of Greek letters that is typical of classical statistics):

$$\Delta g_{ijk}=\mu+s_i+c_j+sc_{ij}+\varepsilon_{ijk} \tag{3}$$

where,

Δg_{ijk}: k^{th} observation of gauge widening with the ith support condition and j^{th} sleeper health state.

μ: Grand population mean for gauge widening.

s_i: Effect of the ith support condition on gauge widening.

c_j: Effect of the jth sleeper health state on gauge widening.

sc_{ij}: Effect of interaction between the ith support condition and j^{th} sleeper health state on gauge widening.

ε_{ijk}: Random error (residual) of the kth observation with the ith support condition and j^{th} sleeper health.

To analyze the experimental results with this model, the errors must be both normally and independently distributed with equal variance [25]. As no correlation was expected to be found, the independence assumption was not formally verified. However, the other assumptions were confirmed using the Shapiro-Wilk test for normality [26] and the Brown and Forsythe's test for homogeneity of variance [27], resulting in significance levels of 0.1200 and 0.2685, respectively. Nevertheless, the gauge widening data had to be transformed [25] to meet these assumptions, and the best transformation was found to be the square root of the negative natural

Table 3
ANOVA results for gauge widening analysis.

Source	Degrees of freedom	Sum of squares	Mean square	F value	Pr > F
Support conditions	5	4.495	0.899	66.6	< 0.0001
Cracking	1	0.018	0.018	1.3	0.253
Interaction support-crack	5	0.049	0.010	0.7	0.602
Error	108	1.459	0.014		
TOTAL	119	6.021			

logarithm of the data. Using the measured mean square error (MSE) as a proxy for sample variance, the deviation of the sample means relative to the respective population means is no greater than 0.01 in. (0.254 mm) for a confidence level of 96%.

The effect of center cracks and different support conditions on gauge widening due to sleeper bending were stated to be either significant or not significant based on a two-way analysis of variance (ANOVA) [28]. For this analysis, there were twelve factor combinations (six support conditions for each of the two sleeper health conditions), each containing ten replicates. The null hypothesis is that all gauge widening values come from the same population and, consequently, have the same population mean. Therefore, this hypothesis implies that the effect of support and sleeper health conditions on gauge widening due to sleeper bending is negligible. To reject the null hypothesis and state that a factor is significant instead, the probability (*p*-value) associated with it must be lower than a chosen significance level (α), which has been set as 0.01 for this study.

Table 3 presents the ANOVA results for the gauge widening analysis, with the last column showing the p-value ("Pr > F" column) that is compared to the significance level. The interaction effect is not significant (p-value of 0.6017), which allows for a better interpretation of the main effects [25]. Not surprisingly, the support condition factor has a significant effect on gauge widening due to sleeper bending. On the contrary, the sleeper health condition does not have a significant effect on the resulting numbers, meaning that the particular cracking pattern created at the laboratory does not contribute to a significant difference in gauge widening in relation to the un-cracked condition.

Fig. 8 shows the resulting gauge widening effect and sleeper shape (i.e. displacement relative to the center) of un-cracked concrete sleepers for the different support conditions. As there is no statistically significant difference between un-cracked and cracked sleepers, the results of the latter are not presented. It is important to highlight, however, that the initially un-cracked sleepers cracked when subjected to the severe center binding condition, as explained earlier in this paper. These results demonstrate that the gauge widening effect due to concrete sleeper bending can be as large as 0.103 in. (2.62 mm) for the extreme center binding support condition for this particular sleeper design. This represents 4.5% of the of 2.28 in. (57.9 mm) value that has been recommended as the ultimate safety limit to avoid wheel drop derailments. In addition to what is shown in the figure, the highest center displacement was 0.069 in. (1.75 mm) for lack of rail seat support and the lowest was 0.039 in. (0.99 mm) for high center binding. The end displacement however, was the greatest for severe center binding (0.277 in. (7.04 mm)), and lowest for lack of center support (0.090 in. (2.27 mm)).

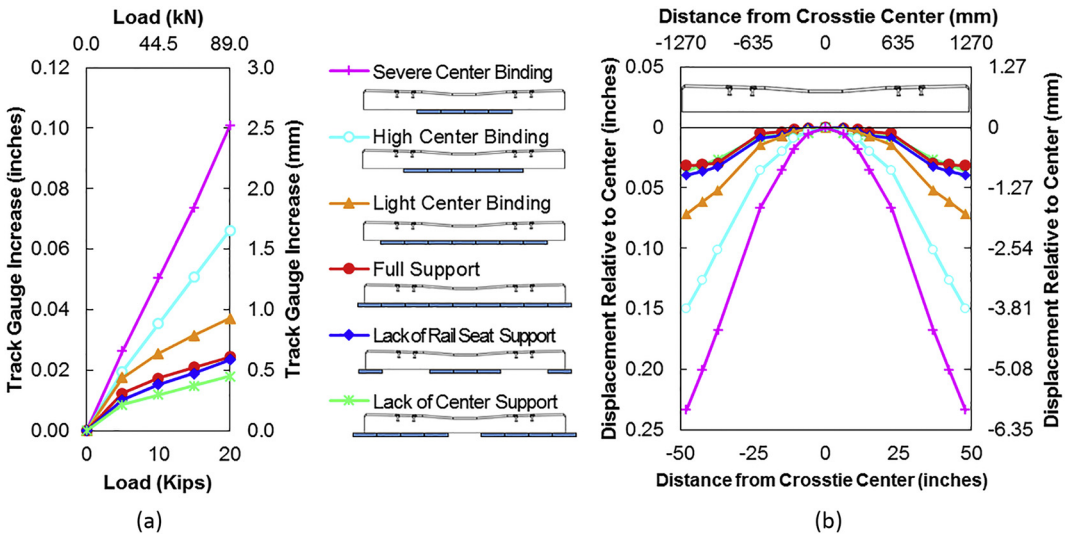

Fig. 8. Un-cracked concrete sleepers under different support conditions: (a) average gauge widening effect; (b) relative displacements at a rail seat load of 20 kips (89 kN).

Table 4
Performance comparison of two concrete sleeper designs at a rail seat load of 20 kips (89 kN).

	Center Displacement		End Displacement		Gauge Increase	
	inches (mm)		inches (mm)		inches (mm)	
	Model A	Model B	Model A	Model B	Model A	Model B
Full Support	0.051 (1.295)	0.061 (1.549)	0.082 (2.083)	0.054 (1.377)	0.024 (0.610)	−0.001 (−0.025)
Severe Center Binding	0.044 (1.118)	0.035 (0.894)	0.277 (7.036)	0.314 (7.970)	0.101 (2.565)	0.119 (3.023)

3.1. Varying sleeper design

All the material thus far presented in this paper is relative to the same sleeper model, which will be referred to as "Model A". To make conclusions that are more generally applied to different concrete sleeper designs, a different sleeper model was also tested, which will be called "Model B". The Model B sleeper was subjected to the "full support" and "severe center binding" cases, with six replicates being collected in each support condition (as opposed to the ten replicates for Model A). Both models are used widely in the U.S. on heavy-haul freight railroad lines. In addition, both models were 8.5 ft long (2590.8 mm) with standard gauge (i.e. 56.5 in. (1435.1 mm)). Sleepers of Model A had 20 prestressing wires, while Model B sleepers had eight prestressing strands. At the center section, Model A is 7.5 in. (190.5 mm) tall and 8.37 in. (212.6 mm) wide, while Model B is 7.0 in. (177.8 mm) tall and 10.0 in. (254.0 mm) wide. Table 4 summarizes the results comparing both models.

As one would expect, the deflections vary as a function of the sleeper design. Even though it presented almost no gauge change in the full support case, Model B allows for greater deflections, leading to a gauge increase 17.8% greater than Model A for the severe center binding case, which could pose a greater risk towards a wheel drop. Conversely, stiffer sleepers are more prone to cracking than the ones that allow for greater deflection, which can potentially affect sleeper life. Therefore, the design differences affect the sleeper behavior, even under the same test configuration, and extrapolation of this deflection analysis to different sleeper designs should be done with care.

In addition, it is worth mentioning that the maximum gauge widening value of 0.119 in. (3.02 mm) for sleeper of Model B represents 11.9% of the FRA limit for Class 5 track and 5.2% of the reference safety limit of 2.28 in. (57.9 mm) previously mentioned in this paper. Moreover, it can be concluded that bending of concrete sleepers can induce a greater increase in track gauge than sleeper manufacturing tolerances (Table 1).

3.2. Severe sleeper deterioration

Given the previously presented cracking pattern created at the laboratory did not contribute to a significant difference in gauge widening in relation to the un-cracked condition (Table 3), more severe deterioration scenarios were created and tested. First, one specimen of Model A sleeper was loaded in the severe support configuration until it could not withstand higher loads and some of the concrete crushed, as shown in Fig. 9. Secondly, another specimen of the same design was cut at the center through the top prestressing wires with a saw at two depth levels: 1.5 in. (38 mm), eliminating 10% of the wires, and 2 in. (51 mm), eliminating 20% of the wires, as shown in Fig. 10. Even though saw cutting does not represent a field failure mode, this extreme condition bounds the problem of how much gauge widening there may be due to center cracking of concrete sleepers.

Once these extreme scenarios were created, the damaged sleepers were loaded up to 20 kips (89 kN) with the severe center binding test configuration. The equivalent gauge widening was then calculated, as displayed in Table 5.

It can be noticed that there was an increase in gauge of 8% for the sleeper that was previously crushed (not accounting for the permanent deformation resulting from crushing), and of 27% for the sleeper with the deepest saw cut in comparison with the previous result of gauge widening for a healthy sleeper subjected to the same severe center binding condition at a rail seat load of 20 kips (89 kN). The maximum gauge widening value of 0.139 in. (3.53 mm) for the sleeper with the deepest saw cut represents 13.9% of the FRA limit for Class 5 track, and 6.1% of the reference safety limit of 2.28 in. (57.9 mm) previously mentioned in this paper. These

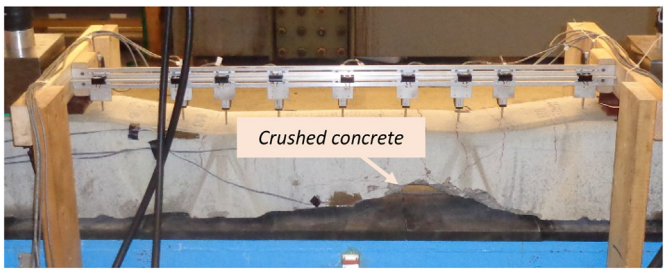

Fig. 9. Severely loaded concrete sleeper with crushed concrete region.

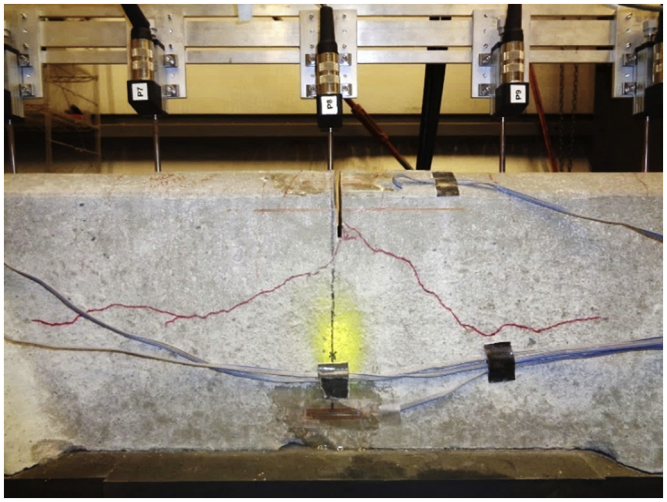

Fig. 10. Saw-cut sleeper (2-in. (51-mm) cut at the center).

Table 5
Estimated gauge increase due to bending of severely damaged concrete sleepers.

Extreme deterioration case	Gauge increase inches (mm)
Crushed concrete	0.109 (2.77)[a]
1.5-in. (38-mm) saw cut	0.132 (3.35)
2-in. (51-mm) saw cut	0.139 (3.53)

[a] Not accounting for permanent deformations resulting from crushing.

results indicate that center sleeper deterioration have very little influence over the gauge widening effect due to concrete sleeper bending, at least for common heavy haul pre-tensioned sleeper designs in North America, as even 0.139 in. (3.53 mm) of increased gauge is still far from 2.28 in. (57.9 mm).

4. Conclusions

Laboratory experiments were performed to quantify the influence of support conditions and sleeper cracking on gauge widening due to sleeper bending. The gauge widening effect due to concrete sleeper bending has been mapped for various support conditions as a function of rail seat load, and Fig. 8 serves as a reference for other applications. In addition, the derived equation for gauge widening estimation is a useful output of this work for similar future tests (Eq. 1). Even though U.S. railroads have expressed concern of center binding conditions in concrete sleeper track being a lead cause in eventual wide gauge derailments, the results presented in this work indicate that bending of concrete sleepers alone do not seem to pose danger to railroad operations in and of itself, even if the sleepers present severe center damage. Additional findings from this research include:

- Concrete sleeper bending due to center binding support led to a maximum gauge widening of 0.119 in. (3.02 mm) for sleeper of Model B for either un-cracked or lightly cracked at the center cases; this represents 11.9% of the FRA limit for Class 5 track, and 5.2% of the reference safety limit of 2.28 in. (57.91 mm) [13];
- Bending of extremely center-damaged sleepers led to a maximum gauge widening of 0.139 in. (3.53 mm) when subjected to a severe support condition at high rail seat loads of 20 kips (89 kN), representing 13.9% of the FRA limit for Class 5 track, and 6.1% of the reference safety limit;
- The track gauge increase induced by bending of concrete sleepers (maximum of 0.119 in. (3.02 mm)) can be greater than the increase induced by sleeper manufacturing tolerances (0.0625 in. (1.59 mm));
- Center cracks that close in the absence of load have no significant effect on change in track gauge due to bending of concrete sleepers (p-value of 0.25);
- Support conditions have a significant effect on the flexural performance of concrete sleepers (p-value $< .0001$);
- Sleeper deflections are dependent on sleeper design (0.101 in. (2.56 mm) for Model A versus 0.119 in. (5.74 mm) for sleeper of Model B for the severe center binding case for example).

These results represent an upper bound for induced track gauge increase due to sleeper bending for given rail seat loads, assuming a real track segment with the presence of adjacent sleepers, rails and fastening systems would contribute to reducing the flexure of each sleeper. Moreover, to obtain a more comprehensive analysis of gage widening, the authors propose future laboratory testing to

include dynamic and lateral loads, with rails and fastening systems being installed. Finally, to understand derailments due to defective concrete sleepers, it is also relevant to analyze problems of longitudinal cracks affecting the bond between the concrete and steel [29], or defective conditions in the rail seat region of the sleeper [30], which can lead to rail movement or fastener failure.

Acknowledgments

This research effort is funded by the Federal Railroad Administration (FRA), part of the United States Department of Transportation (US DOT). The material in this paper represents the position of the authors and not necessarily that of FRA. All laboratory experiments were performed by the Rail Transportation and Engineering Center (RailTEC) of the Univerisity of Illinois at Urbana-Champaign at the Research and Innovation Laboratory (RAIL) at the Harry Schnabel, Jr. Geotechnical Laboratory in Champaign, Illinois. The authors also would like to acknowledge the following industry partners: Union Pacific Railroad; BNSF Railway; National Railway Passenger Corporation (Amtrak); Progress Rail Services, Inc.; GIC USA; Hanson Professional Services, Inc.; and CXT Concrete Ties, Inc., an LB Foster Company. J. Riley Edwards has been supported in part by the grants to the UIUC Rail Transportation and Engineering Center (RailTEC) from Canadian National Railway and Hanson Professional Services. Josué César Bastos has been supported in part by CAPES Foundation, Ministry of Education of Brazil.

References

[1] R.H. Lutch, Devin K. Harris, Theresa M. Ahlborn, Prestressed concrete ties in North America, in: Proc. 2009 Am. Railw. Eng. Maint.— Way Assoc. Annu. Conf., Chicago, IL, USA, 2009.
[2] J.C. Bastos, M.S. Dersch, J.R. Edwards, Determination of critical track conditions and their impact on the performance of concrete crossties and fastening systems, Proc. AREMA 2015 Annu. Conf., AREMA, Minneapolis, MN, USA, 2015.
[3] J.C. Zeman, Hydraulic Mechanisms of Concrete-Tie Rail Seat Deterioration, Master's Thesis University of Illinois at Urbana-Champaign, 2010.
[4] C. González-Nicieza, M.I. Álvarez-Fernández, A. Menéndez-Díaz, A.E. Álvarez-Vigil, F. Ariznavarreta-Fernández, Failure analysis of concrete sleepers in heavy haul railway tracks, Eng. Fail. Anal. 15 (2008) 90–117, https://doi.org/10.1016/j.engfailanal.2006.11.021.
[5] W. Ferdous, A. Manalo, Failures of mainline railway sleepers and suggested remedies – Review of current practice, Eng. Fail. Anal. 44 (2014) 17–35, https://doi.org/10.1016/j.engfailanal.2014.04.020.
[6] J. Taherinezhad, M. Sofi, P.A. Mendis, T. Ngo, A review of behavior of prestressed concrete sleepers, Adv. Rail Track Infrastruct. Res. Pract. ARTIRP 13 (2013) 1–16.
[7] H.E. Wolf, Flexural Behavior of Prestressed Concrete Monoblock Crossties, Master's Thesis University of Illinois at Urbana-Champaign, 2015.
[8] M. Murray, Heavy haul sleeper design – a rational cost-saving method, IHHA 2015 Conf., Perth, WA, Australia, 2015.
[9] J. Leong, Development of a Limit State Design Methodology for Railway Track, Master's Thesis Queensland University of Technology, 2007, http://eprints.qut.edu.au/16565 (accessed February 1, 2016).
[10] B. Ellingwood, T.V. Galambos, Probability-based criteria for structural design, Struct. Saf. 1 (1982) 15–26, https://doi.org/10.1016/0167-4730(82)90012-1.
[11] H. Wu, N. Wilson, 8 Railway vehicle derailment and prevention, Handb. Railw. Veh. Dyn. (2006) 209.
[12] Association of American Railroads, Section G - Wheels and Axle Manual, in: AAR Man Stand Recomm Pract, Association of American Railroads, Washington, D.C., 2011.
[13] N. Sundaram, T. Sussmann, Development of Gage Widening Projection Parameter for the Deployable Gage Restraint Measurement System, Federal Railroad Administration, Washington, DC, 2006.
[14] Federal Railroad Administration, Railroad Freight Car Safety Standards, http://www.ecfr.gov/cgi-bin/text-idx?SID=58a46adf5b9adf23d4f0eb9e6136e076&mc=true&node=pt49.4.215&rgn=div5#se49.4.215_1103, (2016) , Accessed date: 26 February 2016.
[15] Federal Railroad Administration, Railroad Locomotive Safety Standards, http://www.ecfr.gov/cgi-bin/text-idx?SID=58a46adf5b9adf23d4f0eb9e6136e076&mc=true&node=pt49.4.215&rgn=div5#se49.4.215_1103, (2016) , Accessed date: 26 February 2016.
[16] Association of American Railroads, Field Manual of the AAR Interchange Rules, Association of American Railroads, Washington, D.C., 2008.
[17] American Railway Engineering and Maintenance of Way Association (AREMA), Chapter 30 – Ties, in: Man. Railw. Eng. The American Railway Engineering and Maintenance of Way Association, Landover, MD, USA, 2018.
[18] J. Choros, M.N. Coltman, B. Marquis, Prevention of derailments due to concrete tie rail seat deterioration, Proc. JRCICE2007, Pueblo, Colorado, USA, 2007, pp. 173–181, , https://doi.org/10.1115/JRC/ICE2007-40096.
[19] D.Y. Jeong, Y.H. Tang, O. Orringer, Estimation of Rail Wear Limits Based on Rail Strength Investigations, Federal Railroad Administration, Washington, DC, 1998.
[20] Federal Railroad Administration (FRA), Track Safety Standards, in: 49 CFR Part 213 Track Saf. Stand. 10-1-11 Ed, U.S. Department of Transportation, Washington, DC, USA, 2011https://www.gpo.gov/fdsys/pkg/CFR-2011-title49-vol4/pdf/CFR-2011-title49-vol4-part213.pdf , Accessed date: 21 April 2015.
[21] B.J. Van Dyk, M.S. Dersch, J.R. Edwards, C.J. Ruppert, C.P.L. Barkan, Load characterization techniques and overview of loading environment in North America, Transp. Res. Rec. J. Transp. Res. Board. 2448 (2014) 80–86, https://doi.org/10.3141/2448-10.
[22] Z. Chen, M. Shin, B. Andrawes, J.R. Edwards, Parametric study on damage and load demand of prestressed concrete crosstie and fastening systems, Eng. Fail. Anal. 46 (2014) 49–61, https://doi.org/10.1016/j.engfailanal.2014.08.002.
[23] K.R. Manda, M. Dersch, R. Kernes, R.J. Edwards, D.A. Lange, Vertical load path under static and dynamic loads in concrete crosstie and fastening systems, 2014 Jt. Rail Conf., American Society of Mechanical Engineers (2014), http://proceedings.asmedigitalcollection.asme.org/proceeding.aspx?articleid=1878957 , Accessed date: 21 April 2015(V001T01A025, Colorado Springs, CO, USA.).
[24] J.C. Bastos, A. Álvarez-Reyes, M.S. Dersch, J.R. Edwards, C.P.L. Barkan, Laboratory characterization of structural capacity of North American heavy haul concrete crossties, Transp. Res. Rec. J. Transp. Res. Board. (2018), https://doi.org/10.1177/0361198118782250.
[25] R. Ott, M. Longnecker, An Introduction to Statistical Methods and Data Analysis, Cengage Learning, (2008).
[26] S.S. Shapiro, M.B. Wilk, An analysis of variance test for normality (complete samples), Biometrika (1965) 591–611.
[27] M.B. Brown, A.B. Forsythe, Robust tests for the equality of variances, J. Am. Stat. Assoc. 69 (1974) 364–367.
[28] R.A. Fisher, Statistical Methods for Research Workers, 14th Revised and Enlarged, Oliver and Boyd, Edinburgh, 1970.
[29] H. Thun, S. Utsi, L. Elfgren, Load carrying capacity of cracked concrete railway sleepers, Struct. Concr. 9 (2008) 153–161, https://doi.org/10.1680/stco.2007.00024.
[30] S. Kaewunruen, A.M. Remennikov, Progressive failure of prestressed concrete sleepers under multiple high-intensity impact loads, Eng. Struct. 31 (2009) 2460–2473, https://doi.org/10.1016/j.engstruct.2009.06.002.