Optimization of a Prestressed Concrete Railroad Crosstie for Heavy-Haul Applications

Devin K. Harris, A.M.ASCE[1]; Russell H. Lutch[2]; Theresa M. Ahlborn, M.ASCE[3]; and Pelle Duong[4]

Abstract: In response to rising energy costs, there is increased demand for efficient and sustainable transportation of people and goods. One source of such transportation is the railroad. To accommodate the increased demand, railroads are constructing new track and upgrading existing track. This update to the track system will increase its capacity and make it a more reliable means of transportation compared to other alternatives. In addition to increasing the track system capacity, railroads are considering an increase in the size of the typical freight rail car to allow larger tonnage. An increase in rail car loads will, in turn, require the design of track components to accommodate these loads. This design change is especially pertinent to crossties that support the rail and serve to transmit loads down to the substructure. Today, the use of concrete ties is on the rise in North America as they become an economical alternative, competitive with the historical wood ties used in industry, providing performance that surpasses its competition in terms of durability and capacity. Because of the increased loads heavy-haul railroads are considering applying to their tracks, current designs of prestressed concrete railroad ties for heavy-haul applications may be undersized. In an effort to maximize tie capacity while maintaining tie geometry, fastening systems, and installation equipment, a parametric study to optimize the existing designs was completed. The optimization focused on maximizing the capacity of an existing tie geometry through an investigation of prestressing quantity, configuration, stress levels, and other material properties. The results of the parametric optimization indicate that the capacity of an existing tie can be increased most efficiently by increasing the diameter of the prestressing and concrete strength. Findings of the study demonstrate that additional research is needed to evaluate the true capacity of concrete ties because of the impacts of deep beam effects and inadequate development length in the rail seat region. **DOI: 10.1061/(ASCE)TE.1943-5436.0000256.**

CE Database subject headings: Prestressed concrete; Railroad tracks; Optimization; Energy efficiency.

Author keywords: Concrete tie; Sleepers; Prestressed concrete; Railroad; Optimization.

Introduction

In the railroad industry, the crosstie (tie) or sleeper is a primary component of the track superstructure that provides support for the rail and distributes train loads down to the ballast (Fig. 1). Ties are typically wood or concrete, and in recent years applications of composite and steel ties have increased, but these latter alternatives are used to a lesser extent. Today, the use of concrete ties is on the rise in North America as designs and manufacturing processes make them an economically competitive alternative to the historical industry standard wood ties, while providing enhanced durability and increased capacity. Each tie manufacturer—somewhat of a specialty in the precast/prestressed industry—maintains designs and details specific to their customers, but the general shape, dimensions, and regions common to North American concrete ties are illustrated in Fig. 2.

The design of prestressed concrete ties is somewhat similar to other prestressed members in the United States but follows American Railway Engineering and Maintenance-of-Way Association (AREMA) (2009) guidelines and customer specifications rather than building and highway codes such as ACI 318 and AASHTO-LRFD. However, AREMA is not categorized as a design code and often refers to ACI 318 [American Concrete Institute (ACI) 2008] or other material specifications for design methods. Additionally, recommendations within AREMA are often superseded by customer specifications that are typically more stringent than those of AREMA, resulting in a tie designed above the requirements of AREMA.

While the general approach for prestressed concrete ties is similar to that of other prestressed members such as bridge girders, the in-service conditions and design load scenarios present a significant challenge in the design process.

In-Service Conditions

When placed in service, concrete ties are subjected to a variety of loading conditions, including environmental effects, train loads, and ballast support loads, all of which vary over time. Ballast loads are highly dependent on maintenance and time from installation because the condition of the ballast degrades and support shifts over time (Fig. 3). The fraction of load transmitted to each tie from the rail is assumed to be proportional to tie spacing (AREMA 2009), analogous to lateral load distribution in highway bridges, and also includes the effects of impact from moving trains. The result of these effects yields two critical regions along the tie,

[1]Assistant Professor, Dept. of Civil and Environmental Engineering, Michigan Technological Univ., Houghton, MI 49931 (corresponding author). E-mail: dharris@mtu.edu

[2]Project Engineer, Kiewit Engineering Co., Omaha, NE 68131. E-mail: russell.lutch@kiewit.com

[3]Associate Professor, Dept. of Civil and Environmental Engineering, Michigan Technological Univ., Houghton, MI 49931. E-mail: tess@mtu.edu

[4]Engineering Manager, L. B. Foster CXT Inc., Spokane, WA 99216. E-mail: pduong@cxtinc.com

Note. This manuscript was submitted on September 19, 2010; approved on December 28, 2010; published online on December 30, 2010. Discussion period open until April 1, 2012; separate discussions must be submitted for individual papers. This paper is part of the ***Journal of Transportation Engineering***, Vol. 137, No. 11, November 1, 2011. ©ASCE, ISSN 0733-947X/2011/11-815–822/$25.00.

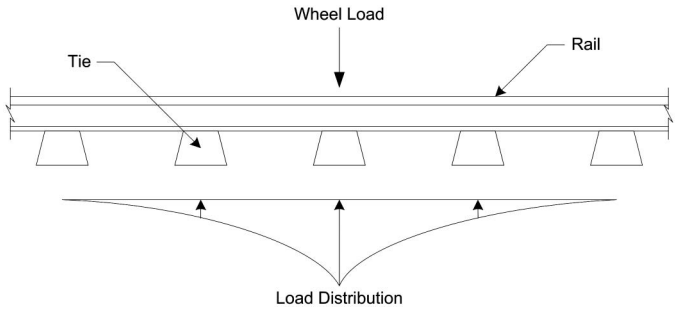

Fig. 1. Distribution of load from single axle along track

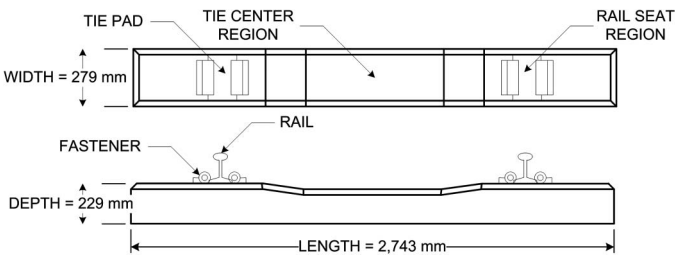

Fig. 2. Generic concrete tie shape and dimensions

the rail seat and center regions (Fig. 2), for which the tie must be designed and tested per AREMA.

Design Scenarios

AREMA provisions provide guidance on specific aspects of prestressed concrete design as they relate to railroad applications but refers to ACI 318 (ACI 2008) for the methodology related to prestressed concrete member behavior and design. The key difference included in AREMA is the definition of flexural strength, defined as the capacity to resist flexural cracking of the member. This definition is not explicitly defined but inferred based on the qualification testing program required of each design that deems a tie acceptable if no cracking is observed under factored design loads. This testing program includes both positive and negative bending tests at the rail seat and center regions of the tie (Figs. 4–7). This differs from ACI 318 design definitions, which include both serviceability requirements on stresses and ultimate strength criteria based on member capacity. Additional requirements included within AREMA relate to performance of the tie under cyclic flexural loads and bond development based on a magnified design load criterion.

Research Significance

With the recent reemergence of the railroads as a major stakeholder in the transportation of goods within the United States comes reflection on operations within the industry. One key consideration is the transition to larger capacity and heavier railroad cars (from 1,272 to 1,401 kN) that are capable of carrying more goods. With these potential changes comes the need to upgrade existing infrastructure to accommodate the increased loads resulting from larger cars. For concrete tie manufacturers, this presents a major challenge because the production of concrete ties is a manufacturing process with significant capital costs for forms and facilities. Other considerations include installation challenges because ties are already heavy and increasing their size would result in a decrease in efficiency, especially considering that installation equipment used in the railroad industry is very specialized. However, there still exists the need to increase the capacity of tie designs while addressing these challenges. The objective of the work presented is to increase the flexural design capacity of an existing heavy-haul prestressed concrete tie while maintaining the existing geometry of the cross section.

Objective and Scope of Investigation

The work presented herein is an analytical investigation of the optimization scenarios for the 505S heavy-haul concrete tie manufactured by L. B. Foster CXT. This tie is typical of the proven design used by Union Pacific Railroad for heavy-haul operations and even exceeds capacity requirements. Alternatives are evaluated for increasing the flexural capacity of the 505S tie while maintaining the cross-sectional geometry, in anticipation of the transition of the railroad industry to larger train loads. Variations in concrete strength, strand/wire configuration and type were parameters considered in the optimization process. The current 505S tie design was used as a baseline for comparison of the optimized designs.

Design Validation

To date, limited published results are available for prestressed concrete ties used in North America, which have historically only been available "in-house" from manufacturers or Class I railroad operators. To validate the optimization approach, design information and experimental results provided by CXT were used for comparison of the 505S analysis. Upon validation of the analytical procedure, the optimization was initiated considering the variables previously noted.

Design Assumptions

Two critical sections were considered in the analysis of the 505S tie capacity—the rail seat and center sections—under both positive and negative bending scenarios. These scenarios replicate the conditions used during tie tests based on AREMA acceptance criteria. Both the service limit state and the nominal flexural capacity were considered, even though AREMA places an upper limit on capacity such that cracking to the first layer of prestressing does not occur. This latter definition is somewhat in disagreement with the traditional definition of ultimate flexural capacity and is more in line with a service limit state. Within this work, the different limit states will be described as (1) service capacity for the ACI serviceability limits of transfer and service loads (ACI 2008), (2) AREMA capacity defining the first cracking capacity (AREMA 2009), and (3) ultimate capacity describing the nominal strength of the member.

Much of the information provided by CXT was from historical practice and experimental results and, as such, resulted in a degree of uncertainty in the analyses. In these cases, existing design provisions such as ACI 318 (ACI 2008) and the Prestressed/Precast Concrete Institute (PCI) *Design handbook* (PCI 2004) were used to provide guidance. ACI 318 was used to determine material characteristics such as modulus of elasticity and allowable concrete and steel service stress limits (Table 1). ACI 440-02 (ACI Committee 440 2004) was used for the allowable stress limits of fiber-reinforced polymer (FRP) (Table 1). Similarly, the PCI *Design handbook* (PCI 2004) was used for prestressing steel stress-strain relationships. Neither provision specifies the preferred method for determining losses, but both provide references for alternatives, including the time-step method proposed by Zia et al. (1979) that was used in the tie analyses. The loss information provided by CXT was limited to 1,000 h (~40 days), but the analyses also considered an

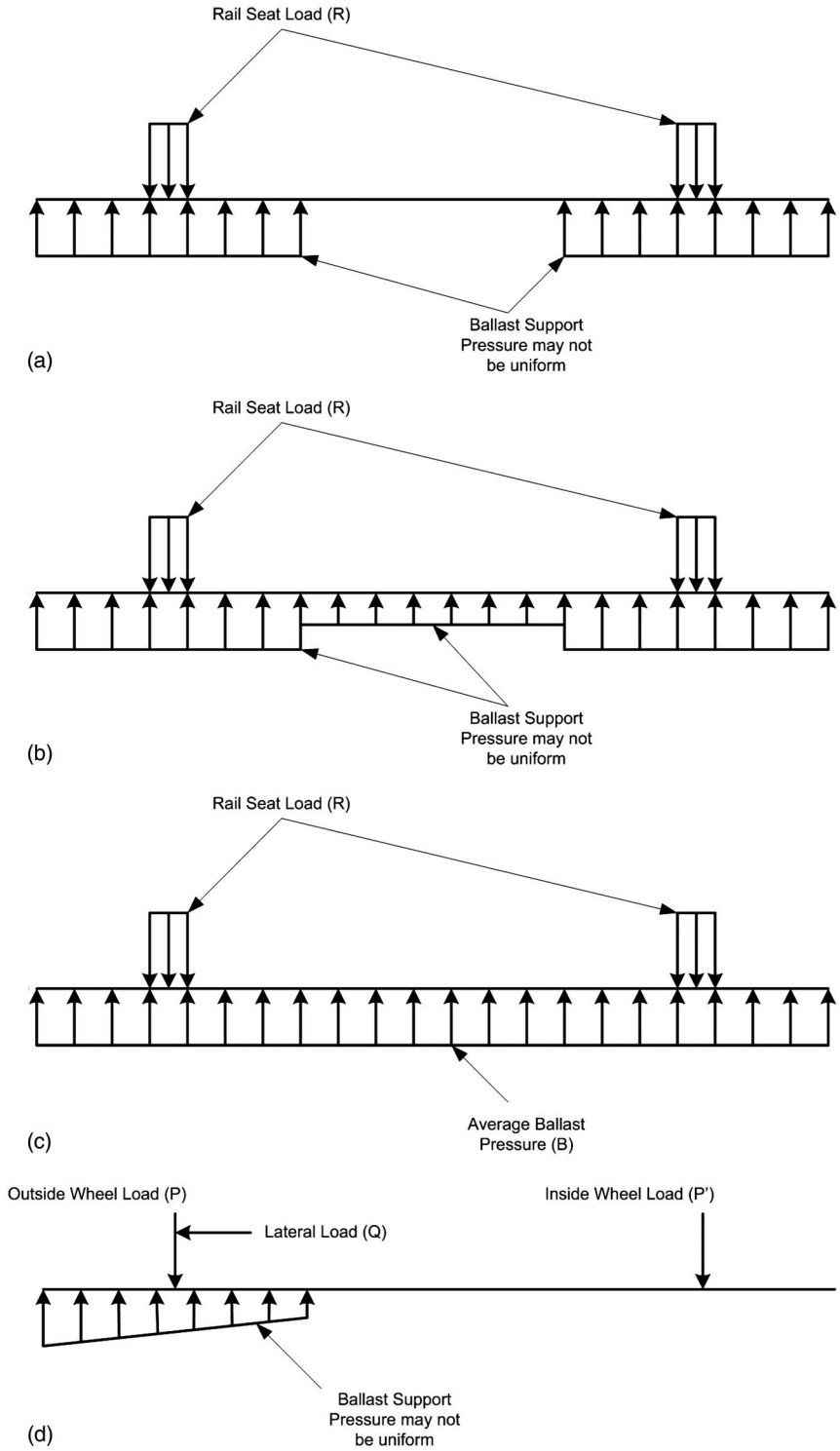

Fig. 3. Ballast support distribution configurations: (a) support following installation owing to tamping only around rail; (b) train traffic consolidating ballast; (c) extensive train traffic; (d) degraded ballast "center-bound" condition

interval of 5 years to account for the long-term effects of concrete creep and shrinkage and steel relaxation, factors which would likely affect in-service ties. Details of the time-step method are not presented in this paper but include contributions from elastic shortening, steel relaxation, anchorage set, creep, and shrinkage.

Design Validation of 505S

The 505S tie was evaluated for two of the conditions previously described: (1) service limit state, and (2) ultimate capacity at both the rail seat and center regions under both positive and negative bending conditions. The AREMA-defined limit state was not included because it was similar to the service limit state and would not be expected to significantly differ owing to the limited tensile capacity of concrete and the proximity of the prestressing steel to the tension face. The ultimate capacity was selected to assess the additional reserve capacity of prestressed concrete railroad ties, which is typically neglected in practice owing to the AREMA-defined service limit state.

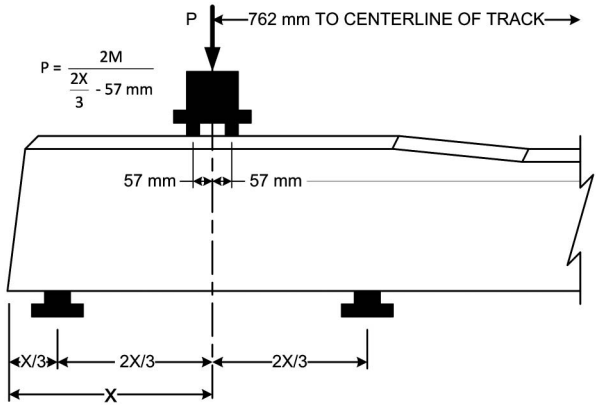

Fig. 4. Positive rail seat moment test configuration as outlined in AREMA 4.9.1, "Design test of monoblock ties" (data from AREMA 2009)

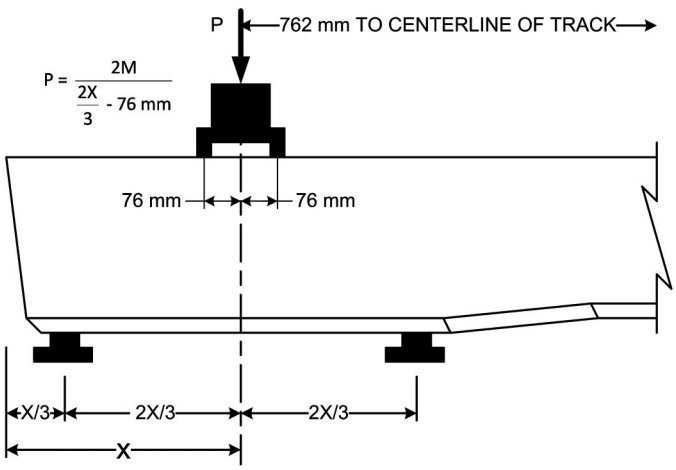

Fig. 5. Negative rail seat moment test configuration as outlined in AREMA 4.9.1, "Design test of monoblock ties" (data from AREMA 2009)

The tie manufacturer typically estimates losses at 40 days subsequent to casting; however, with an estimated service-life of 25+ years for concrete ties, a 5-year loss estimate was also considered to account for long-term creep and shrinkage effects. Additionally, the manufacturer typically designs for a 48 MPa compressive strength, but typical strength gain curves (Fig. 8) illustrate that significantly higher compressive strengths are achieved prior to service. Both variations in compressive strength and prestress losses were considered in the analyses. A summary of the design capacities and experimental results provided by CXT are presented in Table 2.

Some sources of discrepancy between the experimental and design capacities include differences in compressive strength, losses, failure criteria (service versus AREMA), allowable tensile stress, which is not included within AREMA, and deep beam behavior, which likely exists in the rail seat region (Lutch 2009). A key observation is the additional reserve capacity present beyond the crack-limiting design criteria. This reserve capacity illustrates that the 505S ties are capable of supporting significantly higher loads that might result from larger trains but would still require a design change to satisfy the AREMA limiting crack criterion.

Optimization

To address the potential increase in railroad car loads, an optimization of the CXT 505S design was initiated. The goal of the optimization was to increase member capacity while maintaining geometry, which is crucial from both a manufacturing perspective where formwork and associated equipment are standardized and also from a railroad track system perspective where installation and maintenance equipment is highly specialized. To optimize the tie capacity variations in prestressing type, size, and configuration were evaluated along with the effects of different concrete compressive strengths that could be achieved in a precast environment. A summary of the parameters evaluated is presented in Table 3, resulting in 56 optimization analyses when considering all loading scenarios. The objective function of the optimization was to determine the maximum service flexural capacity of the tie grouping. An additional resultant of this investigation was the ultimate capacity of the tie design from a strain compatibility analysis, which has some pertinence if the AREMA cracking criteria were modified in the future.

The optimization was performed by selecting a set of parameters [e.g., W (PT)–0.21 (PD)–15 (CS)] and configuring the prestressing within the member to yield the largest service flexural capacity. Limitations on the optimization included the tie geometry limits, ACI 318 (ACI 2008) cover and spacing requirements for consistency, and prestressing strand stagger requirements to mitigate between strand cracking observed in the aligned pattern designs of the past. The limitations were accounted for by establishing boundary tolerances and manually adjusting prestressing configurations to achieve the maximum eccentricity for the strand pattern (Fig. 9). Other limitations included the available space within the tie cross section and limiting stresses in both the concrete and prestressing strands. The resulting optimizations yielded designs with the largest capacity without cracking, with each of the parameters considered having varying effects on the tie capacity.

Effects of Concrete Compressive Strength

Increasing the compressive strength of the concrete affects two components of the design procedure in particular. First, increasing

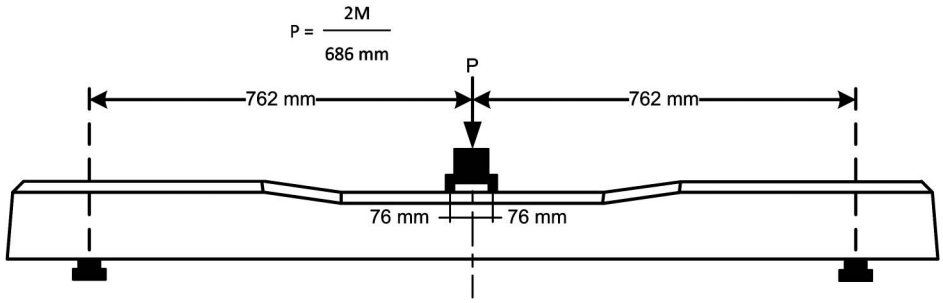

Fig. 6. Positive center moment test configuration as outlined in AREMA 4.9.1, "Design test of monoblock ties" (data from AREMA 2009)

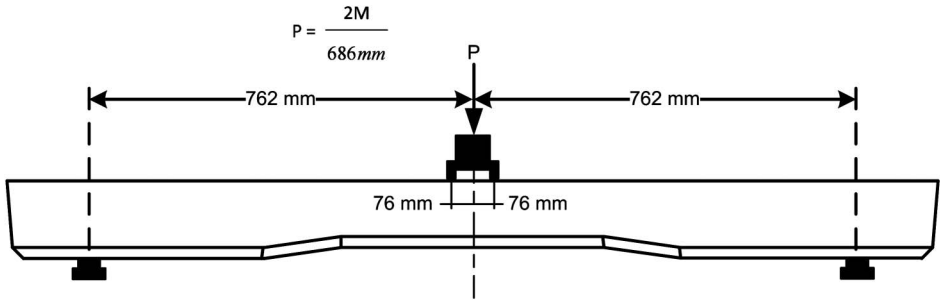

Fig. 7. Negative center moment test configuration as outlined in AREMA 4.9.1, "Design test of monoblock ties" (data from AREMA 2009)

Table 1. Allowable Service Stresses from ACI 318-08 and ACI 440.4R-04

		ACI Limit (ACI Committee 440 2004; ACI 2008)
Concrete	Concrete stress in compression at transfer (σ_{ci})	$0.60f'_{ci}$ (MPa)
	Concrete stress in tension at transfer (σ_{ti})	$0.25\sqrt{f'_{ci}}$ (MPa)
	Concrete stress in compression at service owing to prestress and sustained loads (σ_{cs1})	$0.45f'_c$ (MPa)
	Concrete stress in compression at service owing to prestress and total loads (σ_{cs2})	$0.60f'_c$ (MPa)
	Concrete stress in tension at service (σ_{ts})	$0.62\sqrt{f'_c}$ (MPa)
Reinforcement	Steel jacking stress (f_{pj})	$0.94f_{py}$ but $<$ $0.80f_{pu}$ (MPa)
	Steel stress after transfer (f_{pi})	$0.82f_{py}$ but $<$ $0.74f_{pu}$ (MPa)
	FRP jacking stress (f_{pj})	$0.65f_{pu}$ (MPa)
	FRP stress after transfer (f_{pi})	$0.60f_{pu}$ (MPa)

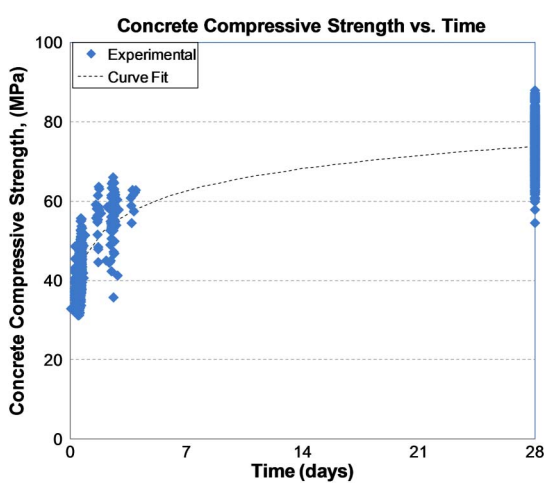

Fig. 8. CXT concrete strength gain over time

the compressive strength increases the allowable concrete stresses as specified by ACI 318-08, both at transfer and service limit states (Figs. 10 and 11). Increased allowable stresses at transfer permit increases in both applied prestressing force and eccentricity, resulting in a higher flexural capacity.

Similarly, increased allowable stresses at service allows the application of larger live loads prior to meeting the compression and tension limits that define failure. The second effect of higher concrete strengths is decreased prestress losses. The prestress losses of creep, shrinkage, and elastic shortening all have components that are a function of the concrete design strength. Increasing the design strength has the inverse effect of decreasing the total prestress losses over time.

Effects of Prestressing Variations (Type, Size, and Configuration)

Variations in prestressing offers multiple means of increasing the tie capacity, such as higher strength materials, increased diameter of tendons, and the ability to optimize prestressing placement and eccentricity with respect to the constant concrete cross section. For the three different prestressing types selected for evaluation, drawn wire, 7-wire strand, and carbon fiber-reinforced polymer (FRP), each have their own advantages and disadvantages; however, all three are capable of enhancing the flexural capacity of the tie.

A relationship that became apparent during the optimization study was the connection between concrete design strength and the level of prestressing within the section. As concrete design strength increased, a larger prestressing force could be applied. With the prestressing tendons in the tie already tensioned to their permissible stress limits, the only means of increasing the prestressing force was to add more tendons to the section or increase the strand area (size). However, the number of tendons successfully placed within the cross section was limited by the detailing requirements of cover and spacing for the fixed cross section. These detailing limitations, in conjunction with the allowable concrete stresses (ACI Committee 440 2004; ACI 2008), dictated the prestressing quantity and configuration, as shown in Figs. 12 and 13. Each plateau illustrates the transition from allowable stress-governed design to detailing-governed design, which was typically associated with the smaller and lower capacity prestressing materials.

Increasing the eccentricity of the prestressing strands in either direction of the horizontal neutral axis, while maintaining the same level of prestressing, reorganizes the stress distribution on the concrete section, which may cause an increase in capacity in one condition and a decrease in another (Figs. 14 and 15). This effect is more apparent at the rail seat section than the center section because the center section has smaller eccentricities resulting from a smaller cross-sectional area (Fig. 2). Similar to the area of prestressing and concrete strength relationship, allowable eccentricity generally increases as concrete strength increases. This increase is a result of the increase in allowable concrete stresses associated with higher compressive strength concrete. An exception to this observation occurs with the FRP cases, which experience a decrease in allowable eccentricity with respect to concrete strengths greater than 65 MPa. This variance results from the limitation on the jacking

Table 2. Design and Experimental Flexural Capacities at Railseat (RS) and Center (C) of CXT 505S

				Service (kN-m)				Ultimate (kN-m)				Reserve strength[a]			
Case	Losses at	f'_c(MPa)	f'_{ci}(MPa)	+RS	−RS	+C	−C	+RS	−RS	+C	−C	+RS	−RS	+C	−C
1	40 days	48	31	39	21	16	21	69	47	38	43	75%	122%	137%	106%
2	5 years			36	20	17	21	68	46	37	42	88%	133%	118%	103%
3	40 days	66	39	42	23	20	25	76	52	43	49	84%	130%	113%	97%
4	5 years			39	22	19	23	75	52	42	48	95%	138%	128%	112%
Actual				45	n/a	n/a	26	n/a	n/a	n/a	n/a	n/a	n/a	n/a	n/a

[a]Reserve strength (%) = [(Ultimate − Service)/(Service)] × 100.

Table 3. Summary of Optimization Parameters and Nomenclature

Prestressing type (PT)		Prestressing diameter (PD)		Concrete strength (CS)	
Description	Designation	Description	Designation	Description	Designation
Drawn wire[a]	W (PT)	5.3 mm (0.21 in.)	0.21 (PD)	48.2 MPa (7,000 psi)	7 (CS)
7-wire strand[b]	S (PT)	6.4 mm (0.25 in.)	0.25 (PD)	65.5 MPa (9,500 psi)	95 (CS)
FRP[c]	FRP (PT)	7.9 mm (0.3125 in.)	0.3125 (PD)	82.7 MPa (12,000 psi)	12 (CS)
		9.5 mm (0.375 in.)	0.375 (PD)	103.4 MPa (15,000 psi)	15 (CS)

[a]5.3-mm-diameter only.
[b]6.4-mm-, 7.9-mm-, and 9.5-mm-diameter only.
[c]6.4-mm- and 7.9-mm-diameter only.

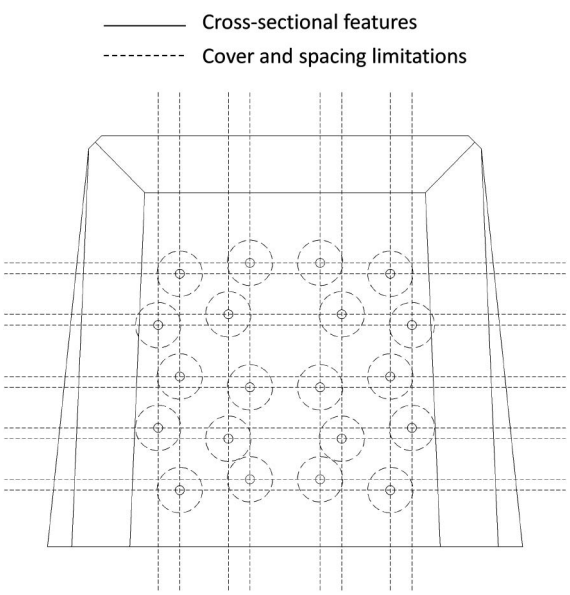

Fig. 9. Optimization boundary template

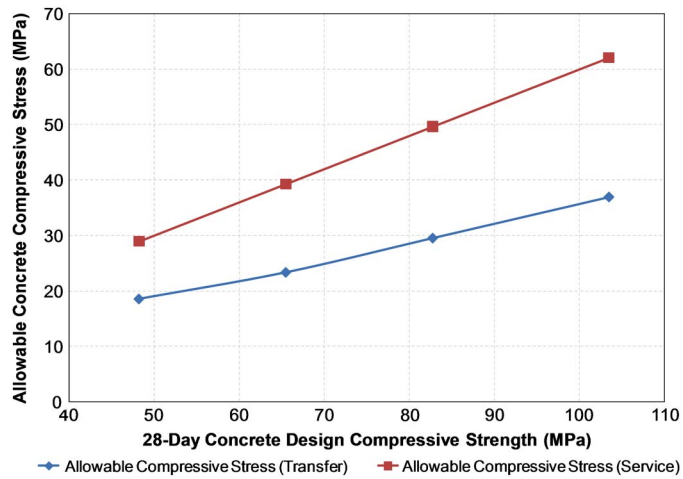

Fig. 10. Allowable concrete compressive stresses at transfer and service based on design concrete strengths

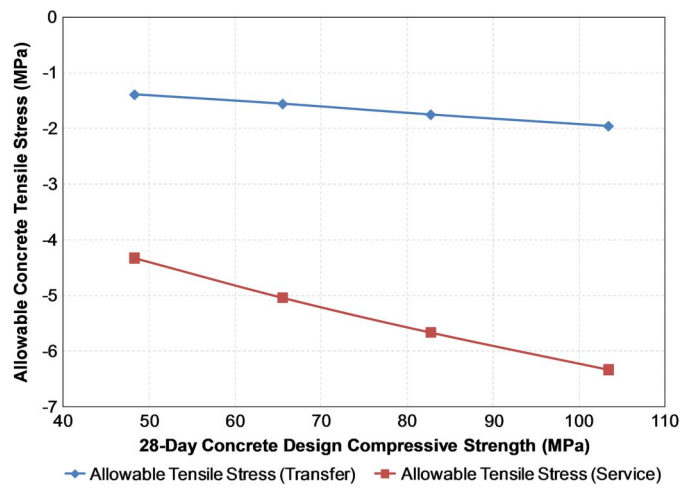

Fig. 11. Allowable concrete tensile stresses at transfer and service based on design concrete strengths

stress that can be applied to the FRP as a result of the limited allowable concrete strength; however, as concrete strength increases beyond 65 MPa, FRP tendons can be pretensioned to a higher initial stress and the eccentricity reduced.

Section Capacity

The impacts of concrete compressive strength and prestressing type and size allow for improvement in the tie capacity, as shown for the rail seat (Fig. 16) and center (Fig. 17) regions of the tie. Similar results were found for the ultimate strength of the tie designs (Figs. 18 and 19), with significant reserve capacity remaining beyond the service limit state. Selecting which optimized design is the best and offers the greatest gain in capacity is difficult because no clear plateau or limit in capacity appears to exist for the material parameter values considered. However, for the same concrete strength, larger diameter steel prestressing tendons have

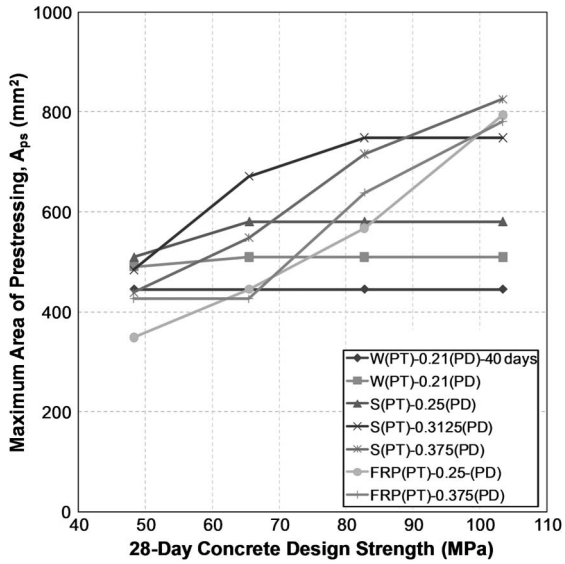

Fig. 12. Area of prestressing for positive rail seat moment

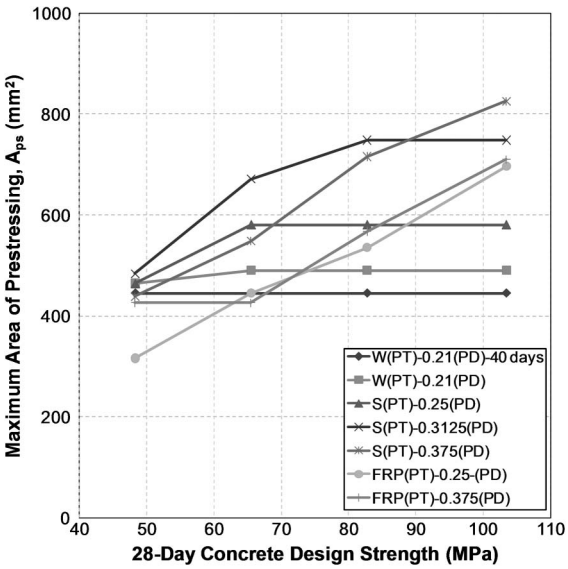

Fig. 13. Area of prestressing for negative center moment

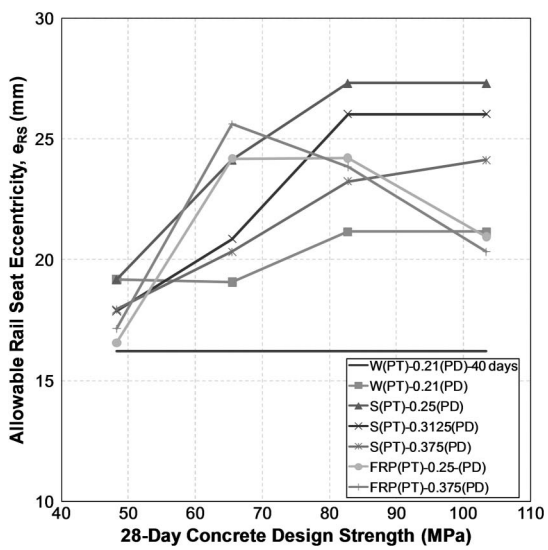

Fig. 14. Eccentricity at rail seat section for positive rail seat

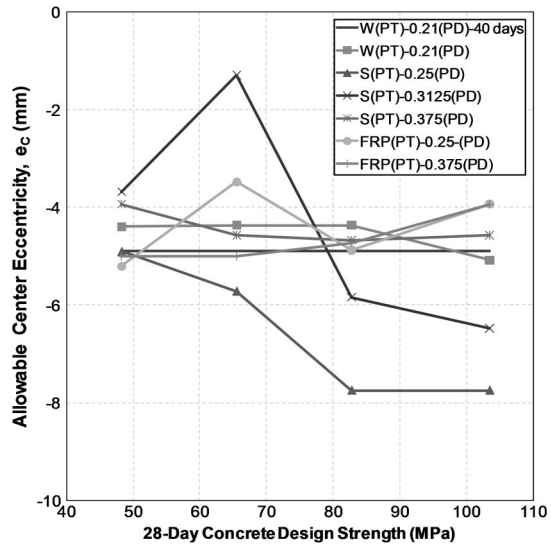

Fig. 15. Eccentricity at center section for negative center moment

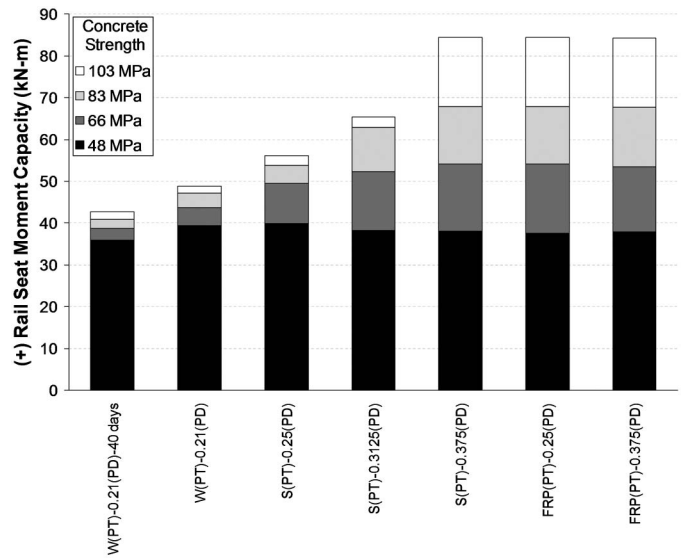

Fig. 16. Positive rail seat moment capacity (service)

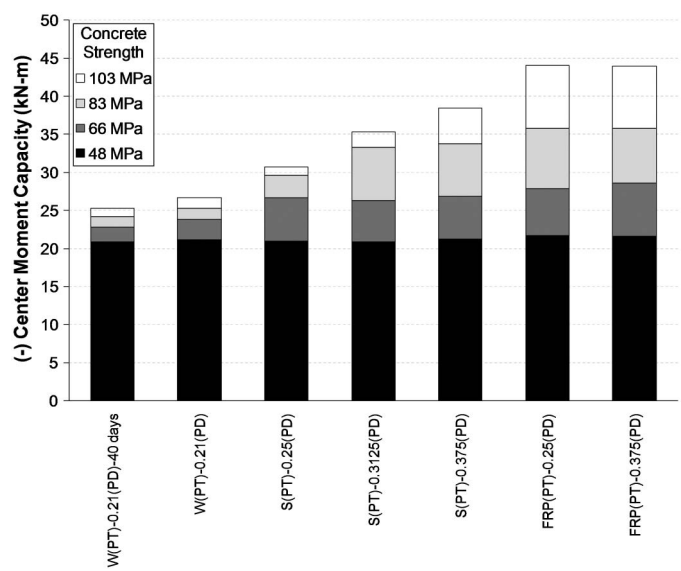

Fig. 17. Negative center moment capacity (service)

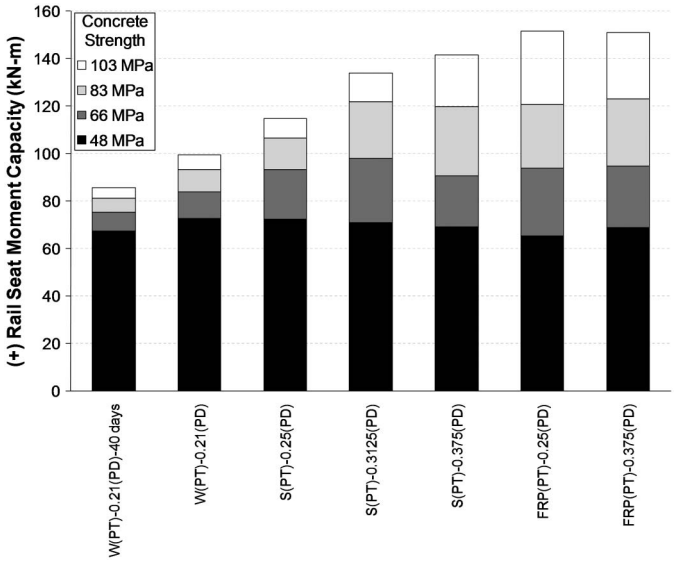

Fig. 18. Positive rail seat moment capacity (ultimate)

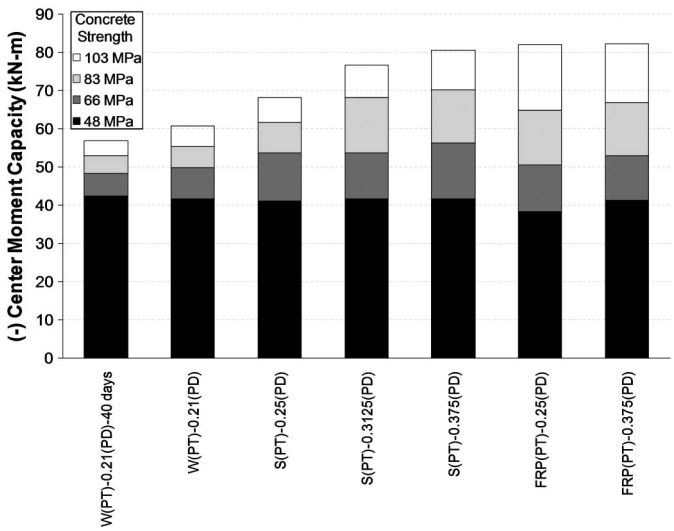

Fig. 19. Negative center moment capacity (ultimate)

larger strength gains than smaller diameter tendons. This becomes particularly evident when detailing becomes the limiting factor in design, rather than allowable stresses at transfer at higher concrete strengths. Based on this observation, the prestressing case S (PT)–0.375 (PD) appears to provide the largest gains for steel prestressing, whereas FRP prestressing appears to be unaffected by changes in diameter. This is a result of the higher strength associated with FRP strands that allows concrete stresses at transfer to remain the governing factor in design.

Conclusions

As the availability of suitable timbers for railroad ties decreases, the use of prestressed concrete ties remains the most promising solution. This engineered product has the potential to provide longer service-life, increased durability, better ride quality, and potentially lower life-cycle costs than their timber counterpart. However, despite their suitability for the harsh railroad environment, a fit for purpose-engineered design is still necessary, especially with the progression to heavier railroad cars. As a result of this progression to heavier cars, there exists the need for a corresponding increase in prestressed concrete tie capacity to meet this demand. Presented was an optimization of a prestressed concrete tie manufactured by L. B. Foster CXT for heavy-haul operations. The objective of the optimization was to evaluate methods for increasing tie capacity while maintaining existing geometry. Parameters considered in this optimization included variations in concrete compressive strength, along with variations in prestressing type, size, and configuration within the cross section.

From the flexural capacity optimization investigation, the following conclusions can be drawn with respect to the impacts of the parameters on the AREMA-defined flexural capacity of prestressed concrete railroad ties:

- Tie capacity increases as concrete design strength increases; for lower levels of concrete strength, capacity is governed by the allowable concrete stresses;
- As concrete strength increases, the governing limits on tie capacity transition from concrete stress to the quantity of prestressing that can be placed on the tie, while maintaining adequate spacing and cover;
- Smaller diameter prestressing tendons reach the governing limit of detailing before the larger tendon diameters, owing to the larger number of tendons required to achieve the same prestressing force;
- Based on the optimization study presented, the following prestressing scenarios yield the greatest flexural capacity, in order from highest to lowest: FRP (PT)–0.25 (PD); FRP (PT)–0.375 (PD); S (PT)–0.375 (PD); S (PT)–0.3125 (PD); S (PT)–0.25 (PD); W (PT)–0.21 (PD).

While the recommendations presented in this work reflect methods for increasing capacity, associated cost, economy of modifications to the manufacturing process, and long-term performance are expected to control the selected solution. Other factors that warrant consideration include durability and fatigue resistance beyond the AREMA-defined limit state which has been exceeded in some environments. Furthermore, this study did not consider deep beam effects or development length in the rail seat region, which warrants further investigation.

References

American Concrete Institute (ACI). (2008). "Building code requirements for structural concrete and commentary." *ACI 318-08, ACI 318R-08*, Farmington Hills, MI.

American Concrete Institute (ACI) Committee 440. (2004). *440.4R-04: Prestressing concrete structures with FRP tendons*, Farmington Hills, MI.

American Railway Engineering and Maintenance-of-Way Association (AREMA). (2009). *Manual for railway engineering*, Chapter 30, Part 4: "Concrete Ties," Lanham, MD.

Lutch, R. H. (2009). "Capacity optimization of a prestressed concrete railroad tie." M.S. thesis, Dept. of Civil and Environmental Engineering, Michigan Technological Univ., Houghton, MI.

Prestressed/Precast Concrete Institute (PCI). (2004). *PCI design handbook: Precast and prestressed concrete*, 6th Ed., Chicago.

Zia, P., Preston, H. K., Scott, N. L., and Workman, E. B. (1979). "Estimating Prestress Losses." *Concr. Int.*, 1(6), 32–38.