NO. UMTA-MA-06-0025-75-8

DATA ANALYSIS AND INSTRUMENTATION REQUIREMENTS FOR EVALUATING RAIL JOINTS AND RAIL FASTENERS IN URBAN TRACK

Robert H. Prause
Harold D. Harrison

FEBRUARY 1975

FINAL REPORT

Prepared for
U.S. DEPARTMENT OF TRANSPORTATION
URBAN MASS TRANSPORTATION ADMINISTRATION
Office of Research and Development
Washington DC 20590

NOTICE

The contents of this report reflect the views of Battelle's Columbus Laboratories, which is responsible for the facts and the accuracy of the data presented herein. The contents do not necessarily reflect the official views of the Department of Transportation. This report does not constitute a standard, specification, or regulation.

Technical Report Documentation Page

1. Report No. UMTA-MA-06-0025-75-8	2. Government Accession No.	3. Recipient's Catalog No.
4. Title and Subtitle DATA ANALYSIS AND INSTRUMENTATION REQUIREMENTS FOR EVALUATING RAIL JOINTS AND RAIL FASTENERS IN URBAN TRACK		5. Report Date February 1975
		6. Performing Organization Code
7. Author(s) Robert H. Prause, Harold D. Harrison		8. Performing Organization Report No. DOT-TSC-UMTA-75-2
9. Performing Organization Name and Address Battelle-Columbus Laboratories* 505 King Avenue Columbus OH 43201		10. Work Unit No. (TRAIS) UM504/R5714
		11. Contract or Grant No. DOT-TSC-563
12. Sponsoring Agency Name and Address U. S. Department of Transportation Urban Mass Transportation Administration Office of Research and Development Washington DC 20590		13. Type of Report and Period Covered Final Report May 1974 - December 1974
		14. Sponsoring Agency Code
15. Supplementary Notes *Under contract to: U. S. Department of Transportation, Transportation Systems Center, Kendall Square Cambridge MA 02142		

16. Abstract

This report was prepared as part of the Rail Supporting Technology Program sponsored by the Office of Research and Development, Rail Programs Branch, of the Urban Mass Transportation Administration. Rail fasteners for concrete ties and direct fixation and bolted rail joints have been identified as key components for improving track performance. However, the lack of statistical load data limits the development of improved design criteria and evaluation tests. This report evaluates the data required for design, laboratory tests, and for the development and verification of analytical models of fastener and joint performance. Available track instrumentation is reviewed for fulfilling these requirements, and functional specifications have been developed for improved tie plate load cells and instrumented wheels. Also included are recommendations for data analysis and data processing procedures and test site selection criteria needed to plan and conduct comprehensive measurement programs.

17. Key Words Track, track loading, rapid transit systems, rail fasteners, rail joints, rail stresses		18. Distribution Statement DOCUMENT IS AVAILABLE TO THE PUBLIC THROUGH THE NATIONAL TECHNICAL INFORMATION SERVICE, SPRINGFIELD, VIRGINIA 22161	
19. Security Classif. (of this report) UNCLASSIFIED	20. Security Classif. (of this page) UNCLASSIFIED	21. No. of Pages 160	22. Price

Form DOT F 1700.7 (8-72) Reproduction of completed page authorized

PREFACE

This report has been prepared by Battelle's Columbus Laboratories (BCL) under Contract DOT-TSC-563 as part of the Urban Rail Supporting Technology Program managed by the Transportation Systems Center (TSC). This program was sponsored by the Office of Research and Development, Rail Programs Branch, of the Urban Mass Transportation Administration, Washington, D. C.

The overall objective of this contract was to evaluate the technical factors which govern the design and performance of at-grade rail track structures. Previous reports on this work include a two-volume technical report and a bibliography. Volume I of the technical report, Report No. UMTA-MA-06-0025-74-3 (PB 233016/AS), describes the design and performance of tie-ballast track, and Volume II, Report No. UMTA-MA-06-0025-74-4 (PB 233017/AS) is an evaluation of the requirements for designing concrete slab track. The bibliography, Report No. UMTA-MA-06-0025-74-7 (PB 238127), was based on the reference material that was obtained and organized to support the technical program.

Dr. Leonard Kurzweil, Code 612, at the Transportation Systems Center, was the technical monitor for all of the work under this contract. The cooperation and suggestions provided by Dr. Kurzweil, Mr. Donald McConnell, and Mr. Roger Steele of TSC for the work covered by this report are gratefully acknowledged. Mr. Richard Rice and Dr. Thomas Johns of BCL deserve recognition for their contributions on fatigue and on the mechanics of bolted rail joints.

TABLE OF CONTENTS

TABLE OF CONTENTS (Continued)

TABLE OF CONTENTS (Continued)

LIST OF ILLUSTRATIONS

LIST OF ILLUSTRATIONS (Continued)

LIST OF TABLES

1.0 INTRODUCTION

Rail fasteners and bolted rail joints have been identified as key components in urban track. The design of improved rail fasteners for concrete ties and direct fixation to concrete invert represents one of the most promising prospects for improving track performance. Degradation of both standard and insulated bolted joints is a major track maintenance problem that is particularly important for the rapid transit industry. Failed insulated joints cause immediate train delays and the noise and vibration caused by train wheels crossing both types of joints are a major annoyance factor for the passengers and the community.

The lack of a detailed statistical description of the loads from train wheels is an important restraint to developing improved design criteria and evaluation tests for these components. This report includes an evaluation of the data needed to develop realistic design specifications and laboratory tests, and to develop and verify analytical models of fastener and joint performance. Available track instrumentation is evaluated for fulfilling these requirements and functional specifications have been developed for improved instrumentation when existing instrumentation is inadequate.

The major conclusions and recommendations resulting from this work are summarized in Section 2. The details of the development of measurement and data analysis requirements for rail fasteners and bolted rail joints are given in Sections 3.1 and 3.2, respectively. This includes a discussion of the service loads and major failure modes which were considered for determing the evaluation objectives. It also includes a discussion of the data processing and test site selection criteria that are needed to plan and conduct a comprehensive measurement program.

Section 4 of this report evaluates available track instrumentation for meeting the measurement requirements identified in Section 3 and includes recommendations for instrumentation development. The instrumentation review is based on available literature and the experiences of BCL staff and other persons who have been making track measurements. The measurements included in this review are tie plate loads, wheel-rail forces, rail deflections, rail stresses, bolt forces, and vehicle speed and position.

2.0 SUMMARY OF CONCLUSIONS AND RECOMMENDATIONS

Rail fasteners for concrete ties or for direct fixation to concrete track structures are key components for improving track performance. The stiffness characteristics of the fastener have a significant effect on the overall track stiffness. Track stiffness determines the portion of the wheel/rail loads transmitted to individual fasteners and has a major influence on the magnitude of the wheel/rail dynamic forces resulting from track geometry irregularities.

Rail fastener service loads include the vertical and lateral reactions from wheel loads and longitudinal and lateral forces from thermal deflections of the rail and support structure. Rail clip failures, loose fasteners, deterioration of rail or tie plate pads, loss of electrical insulation and fastener pull-out have been identified as the major failure modes. The important mechanisms governing these failures are fatigue from cyclic loading, yielding or fracture due to a single high load, wear at contacting surfaces, and general deterioration from the environment.

Three basic objectives were selected for evaluating the data requirements related to fastener service loads and performance. These objectives were:

- The development of improved criteria for fastener design.
- The design of laboratory tests to simulate fastener loads with sufficient accuracy to predict service life.
- The development and verification of analytical models describing rail fastener mechanics.

These objectives were used to make separate priority rankings of the many possible measurement parameters that could be used to describe fastener performance. The measurement parameters included the categories of wheel/rail loads, fastener loads, fastener displacements and fastener component loads. Instrumentation performance requirements and data analysis procedures were recommended for the highest priority measurement parameters in each category. Data analysis recommendations included time histories, amplitude probability analysis of peak responses, fatigue statistics and spectral analysis. Specific analysis methods were recommended according to the measurement parameters and the basic objectives discussed previously.

The poor service performance of bolted rail joints results primarily from the conflict between the joint structural requirements and the joint's role in providing longitudinal slip to reduce rail thermal loads. The major joint failure modes are short circuits in insulated joints, bolt hole and rail web fatigue cracks, rail end batter, joint bar fractures, and the general degradation of the track in the vicinity of loose joints. Bolted rail joints become loose because of the relative motion and wear at the contact surfaces between joint components. As the joint loosens, the loading on adjacent ties increases, and this causes the joint to deteriorate at a rapidly increasing rate.

Loose joints are also responsible for high forces when wheels cross the joint and impact the running-on rail. These impact forces excite rail response in the frequency range of 500 to 2000 Hz. Two peak forces, which usually occur on opposite sides of the rail bolt holes, are believed to be responsible for the high alternating stresses which govern the initiation of fatigue cracks at the bolt holes.

The measurement and data analysis requirements for bolted rail joints were evaluated using the same procedure discussed previously for rail fasteners. Priority rankings of measurement parameters were established, and the highest priority measurement parameters were investigated to determine the instrumentation performance specifications and data analysis procedures needed for each of the following major objectives:

- The identification of the principal mechanics governing joint degradation and failure.
- The development and verification of analytical models describing the mechanics of bolted rail joints.
- The design of laboratory tests to simulate joint loading and provide life tests that correlate well with service life.
- The development of improved criteria for joint design.

2.1 INSTRUMENTATION

The instrumentation requirements for bolted rail joints and rail fastener measurements are quite similar in many ways, but the frequency response

required for some of the joint response measurements is considerably higher. The conclusions and recommendations for both rail fastener and rail joint instrumentation are discussed according to the measurement parameters, and significant differences pertinent to these track components are identified when necessary.

Tie Plate Load Measurement. Several different designs for tie plate load cells and a technique for using strain gages on the rail to measure tie plate loads were evaluated. Although none of the current tie plate load cell designs have been used to measure all 3 load components (vertical, lateral, and rail rollover moment) needed for urban rail joint and rail fastener measurements, the development of a suitable tie plate load cell based on the concepts used for previous load cell designs appears feasible.

The most difficult problem in using any type of tie plate load cell on tie-ballast track is to develop a procedure for installing the load cell in place of a standard tie plate and obtain representative tie plate load measurements. The considerable free-play and warping of components in most tie-ballast track makes it necessary to shim the tie plate load cell to eliminate clearances and then allow sufficient time for the measurement tie to readjust under traffic before valid data can be expected.

The dimensional restraints on a tie plate load cell designed for concrete invert track will be a severe handicap unless the concrete structure can be excavated for the measurement tie plate. If this is possible, then a more universal tie plate load cell could be designed for use with a variety of direct fixation rail fasteners. This would be an important advantage for obtaining the recommended data on rail fastener load data using a range of vertical and lateral fastener stiffnesses that is sufficient for future design specifications.

Wheel/Rail Force Measurement. The measurement of vertical and lateral wheel/rail forces and their correlation with track response measurements have a high priority for both the rail fastener and rail joint data requirements. Resolution of the high frequency response from joint impacts requires an essentially continuous measurement of wheel/rail forces with a 2kHz frequency response capability. The review of wheel/rail force measurement techniques included instrumented wheels, instrumented trucks, and track measurements using strain gaged

rail. However, the instrumented wheel represents the best choice for meeting the requirements for high frequency response and for continuous measurement of wheel/rail forces.

The instrumented wheels in current use include specially fabricated spoked wheels and standard, solid-disc wheels with a variety of strain gage circuits. The advantage of a spoked wheel is that vertical and lateral load measurements can be isolated relatively easily. However, it may be difficult to design a spoked wheel with the high natural frequencies needed for measuring high frequency impact forces, and the number of spokes needed for a continuous force signal may be prohibitive. The practical disadvantage of a spoked wheel is the necessity for establishing its reliability and safety for service--a problem which is eliminated by instrumenting a standard wheel.

Instrumenting a standard wheel for force measurements requires a mapping of the strain distribution from vertical and lateral loads to determine strain gage locations providing minimum cross talk. Suitable locations for measuring lateral loads can be identified relatively easily, and the summed output from gages at 6 to 8 equally spaced intervals around the wheel provides a practically continuous measurement with good sensitivity. Locating gages for vertical measurements having sufficient sensitivity and isolation from lateral loads is much more difficult. The wheels in current use produce only periodic measurements of vertical load, usually twice per revolution. Some wheels have holes drilled near the wheel rim to increase sensitivity and reduce cross talk. However, the output from these gages resembles a "spike", so that an excessive number of holes would be needed to provide a continuous measurement.

The development of an instrumented wheel to meet the accuracy and frequency response specifications recommended in this report for continuous vertical and lateral wheel/rail force measurements is a key factor for obtaining improved track data. However, the considerable development work that has already been accomplished by many different investigators provides a substantial base for achieving this objective.

Rail Deflections and Rail Strain Measurement. Available information for deflection and strain measurements appears adequate for meeting the data requirements for rail fasteners and bolted rail joints. The major concern with

making these measurements is the possibility of excessive electrical noise from electromagnetic interference (EMI) and radio frequency interference (RFI) from the traction power return current in the rail and arcing at the third rail. Interference from these disturbances can be reduced substantially by appropriate design of the transducer and signal conditioning systems and by shunting or isolating the track test section from the power return current. However, it is recommended that the severity of this potential problem be determined by making some trial measurements before starting an extensive measurement program. No quantitative data were available to determine if electrical interference will be a serious problem for this type of transit track measurements.

Bolt Force Measurement. As discussed previously, the retention of preload in rail joint bolts is a major factor in joint behavior. This force can be measured using commercially available load washers or special instrumented bolts. It is recommended that both techniques be tried until the failure mode responsible for the reduction in clamping force is clearly identified. Instrumented bolts are preferable if wear at the contact surfaces of the bolt, nut, and lockwashers is the major problem. However, if wear at the contact surfaces between the joint bars and the rail or deformation of the bolt is critical, a load washer is recommended to avoid the possible effect of using nonstandard track bolts.

Wheel Detection Measurement. Accurate measurements of wheel position with time, the total number of wheels, and vehicle speed through the test site are needed for data processing. These data are needed to provide a time correlation between wheel/rail forces and track response and to identify sampling intervals for detecting peak forces, motions, and strains for each wheel pass. Magnetic detectors located on each side of the instrumented track section are recommended. A detector of this type has been developed for hot box detection systems, so it is capable of operating reliably in the severe track environment. With proper signal conditioning, the pulse from a magnetic detector can be used to trigger the necessary logic circuits.

2.2 RAIL FASTENER MEASUREMENT PROGRAM

In addition to selecting the measurement parameters, instrumentation, data analysis techniques, and data acquisition systems, the overall test plan is a significant factor for achieving the objectives of a measurement program. It is recommended that the rail fastener measurements be made at a test site location having concrete invert track constructed on a rock foundation because fastener performance is most critical on very rigid track. A minimum test section length of 150 feet with 6 randomly-selected fastener measurement locations are needed to obtain statistical data which includes track variations. The vertical and lateral stiffnesses of the test section fasteners should be varied to cover the maximum expected design range. This variability can be provided by changing the geometry and stiffness of the elastomeric pads in a conventional or specially designed fastener. It will be necessary to adjust the fastener characteristics over a total test section of 750 feet to provide a minimum 600 foot approach section to the measurement site.

A 24-hour measurement period during the business week is recommended for each of the 6 instrumented fasteners to provide a representative sample of transit traffic variations. The fastener test site should be on curved track having a high traffic density of recent vintage transit vehicles operating close to the maximum operating speed for the property to provide the most severe loading environment.

2.3 RAIL JOINT MEASUREMENT PROGRAM

The objectives for the rail joint measurements are based on documenting the degradation of a "typical" joint as it progresses from new to poor condition. It will be necessary to verify that the degradation mode of the instrumented joint is similar to other joints, but the degradation rate may be different. A test site location on new, or recently maintained, at-grade tie and ballast track is recommended to include the effect of roadbed interaction. Measurement sessions lasting for 24 hours and repeated at intervals of 2 to 3 months until the joint must be repaired should be adequate. A test site located on a maximum speed section tangent track is recommended for initial rail joint measurements unless transit property maintenance experience indicates that joint performance on curves is a significantly greater problem.

3.0 DEVELOPMENT OF MEASUREMENT AND DATA ANALYSIS REQUIREMENTS

This section of the report discusses the measurement parameters and the data analysis procedures which are recommended for determining the performance of rail fasteners and bolted rail joints. Particular objectives have been identified based on a previous study [3-1]* which identified the type of data needed for each of these components. The selection of specific measurement parameters is based on meeting these objectives. Data analysis techniques have been selected based on available information about the most frequent failure modes for fasteners and bolted joints. The criteria for selecting a test site location are also discussed to provide the information needed to develop more specific test plans and test procedures. The requirements for fasteners and for bolted joints are discussed as separate sections, although there is a great deal of similarity in many of the requirements.

3.1 RAIL FASTENERS

The discussion of rail fasteners in this report is restricted to devices for attaching rail to concrete ties or as direct fixation fasteners for a continuous concrete structure. This type of fastener has the greatest potential for improving track for urban rail transit systems and the diverse functional requirements make it one of the most sophisticated track components. This can be appreciated by reviewing the role of conventional fasteners for tie and ballast track.

The classical wood tie and ballast track construction in this country uses cut steel spikes alone or a combination of spikes and a steel tie plate for a rail fastener. The basic role of this fastener is to maintain rail gage and to distribute rail seat loads over the broader area of the tie plate. This fastener is not intended to provide a vertical hold-down force on the rail, to restrict the longitudinal motion of the rail, or to provide any lateral or vertical resilience or electrical insulation. The combination of wood ties, steel tie plates, and spikes does, however, provide a fastening system with lateral adjustability and good electrical insulation.

---

* Numbers in brackets designate references listed in Reference Section.

In the earliest applications of concrete ties, an insert utilizing a steel bolt and a steel clip replaced the traditional cut or screw-type steel spike. The need for additional electrical insulation to replace the inherent insulating properties of wood ties led to more complicated fastener designs using elastomeric or fiber type pads beneath the rail. This introduced the potential for varying the rail support stiffness while maintaining the same tie type and spacing. It also became possible to incorporate a means for restraining the rail longitudinally in the fastener. The net result for many existing concrete tie fasteners is a fastener that not only maintains lateral alignment, but also provides complete electrical insulation, provides restraint to longitudinal motion, supplies a positive vertical hold-down force, and provides lateral and vertical resilience. This resilience is needed to compensate for the increased track stiffness resulting from the bearing area of a concrete tie being greater than that for a wood tie (for fixed tie spacing). Also, increased rotational restraint between the rail and tie in a horizontal plane can significantly increase the lateral rigidity of the track panel [3-2]. However, this feature has been largely neglected in current fastener designs.

The use of direct fixation fasteners on concrete structures requires two major changes in the rail fastener requirements. First, the concrete structures are inherently stiffer than at-grade ballast track. Although this increase in stiffness is desirable for reducing the magnitude and frequency of the pressure pulses transmitted to the subgrade, this increase in stiffness is undesirable from the standpoint of dynamic forces generated at the wheel/rail interface. Normal imperfections in track geometry and wheel profiles generate dynamic forces which adversely affect the ride of the vehicle and the maintenance of both the vehicle and the track. Previous studies by Battelle [3-3, 3-4] and others have shown that these dynamic forces can be reduced by reducing the stiffness of the rail fastener, and this becomes a major fastener design requirement. Resilience is also desirable for reducing ground borne vibration transmitted to the surrounding community.

3.1.1 Fastener Service Loads

The development of data requirements for rail fasteners requires a good understanding of how a fastener performs in service. Much of the material in this section is summarized from Section 3.2.3.1 of [3-1], and this reference should be used if a more detailed discussion is desired.

The most important fastener service loads are the vertical forces which are transmitted from the train wheels into the track structure. An interesting aspect of the vertical load pattern is the presence of upward motions ("waves action") both ahead and behind the wheel. In conventional track with rail spikes, the "wave action" is virtually unrestricted and the rail lifts freely from the tie. But a resilient rail fastener must be capable of withstanding these uplift forces continuously without fatigue failures in structural components or extensive degradation of the resilient materials.

In addition to the vertical loads, large lateral loads are developed on curves, by vehicle hunting, and also by the rail forces due to thermal expansion and contraction. If a resilient element is used underneath the rail, it must be stiff enough to prevent excessive lateral motion of the rail or derailments will occur due to excessive gage spread or rail rollover.

In order to determine reasonable design loads for individual rail fasteners, it is first necessary to consider the actual transit car wheel loads, and then to determine how the wheel loads will be distributed on the rail fastener supports. Table 3-1 summarizes some typical results for vertical and lateral rail fastener loads for "maximum" and "frequent" loading conditions. The "maximum" condition relates to the ultimate strength of the fastener for a single load application. The "frequent" loading condition represents reasonable average service loads for fatigue design considerations and endurance tests. These data are included to illustrate current procedures for developing the loading used in rail fastener specifications and for the selection of instrumentation. The data should not be interpreted as recommendations for any particular railroad or rapid transit application. Furthermore, a major objective of this program is to determine the requirements for obtaining improved service load data to replace the relatively simplified description given in Table 3-1.

The longitudinal restraint characteristics of a rail fastener replace the role of the rail anchor commonly used with wood ties and determine its effectiveness for maintaining a minimum rail gap resulting from a rail fracture at temperatures below the mean rail-laying temperature. The high longitudinal holding capacity of most fasteners used for direct fixation keeps the rail gap quite small. For ballast track, however, the holding power of the concrete tie in the ballast determines the rail gap. Some measured data indicate that a concrete tie will actually have a linear load-deflection characteristic for loads below the assumed 1800-pound per rail slip load (3600 pounds per tie), and that slip between the tie and ballast begins when the tie has moved about 0.2 inch. Thus, the fasteners adjacent to a rail break will not be loaded to 1800 pounds until the total rail gap exceeds 0.4 inch.

The high longitudinal load capacity of many direct fixation fasteners, however, indicates that rail stresses resulting from the large thermal movement of aerial structures may be much higher than anticipated. The thermal movement of an aerial structure will cause high longitudinal loads on fasteners adjacent to the expansion joints in the aerial structure. An upper limit for rail fastener longitudinal slip forces is needed in order to limit the maximum rail stresses caused by thermal contractions of the aerial structures. In some cases, it is necessary to analyze the thermal stresses throughout entire sections of complex aerial structures to check the rail stresses and fastener loads induced by structural motions.

In order to complete a description of fastener performance, allowable lateral deflections must be included based on maximum allowable gage spread (typically 1/8 to 1/4 inch) for both ultimate and "frequent" loading conditions. It is also important to consider the effect of the vertical fastener stiffness on the rail roadbed loading and the dynamic forces transmitted to the vehicle. As mentioned previously, the conclusion from theoretical studies and railroad experience is that resilient fasteners must be used with stiff support structures or the wheel-rail forces and the resulting deterioration of the track and vehicles will be excessive. One of the major design problems is that of providing sufficient vertical flexibility while keeping the lateral stiffness

TABLE 3-1. SUMMARY OF TYPICAL VERTICAL AND LATERAL RAIL FASTENER DESIGN LOADS [3-1]

1. Vertical Wheel Loads*
   a. Maximum Load: 30,000 lb
   b. Frequent Load: 12,000 lb
2. Vertical Rail-Fastener Loads
   a. Maximum Compressive Load: 18,000 lb
   b. Maximum Uplift Load: 1,100 lb
   c. Frequent Compressive Load: 7,000 lb
   d. Frequent Uplift Load: 700 lb
3. Simultaneous Vertical and Lateral Wheel Loads
   a. Maximum Vertical/Lateral Load: 30,000 lb/18,000 lb
   b. Frequent Vertical/Lateral Load: 12,000 lb/5,000 lb
4. Simultaneous Vertical and Lateral Rail-Fastener Loads
   a. Maximum Vertical/Lateral Load: 18,000 lb/16,200 lb
   b. Frequent Vertical/Lateral Load: 7,000 lb/4,500 lb

* Based on normal loaded car weight of 80,000 pounds (10,000 lb nominal static wheel load), and car with crush load weighing 98,000 pounds.

sufficiently high to avoid excessive gage spread. Wilson [3-5] indicates that wheel and rail wayside noise is minimized when the fasteners provide a track support modulus of about 5,000 lbs/in. per inch of track length and that a modulus of 3,000 represents a minimum practical stiffness for reducing vibration. Softer fasteners will further attenuate vibration transmitted to the ground, but the effect of softer fasteners on noise is somewhat in dispute [3-6]. Another basic problem is that the characteristics of almost all elastomers vary considerably with temperature, making it difficult to maintain a desired track stiffness.

It is apparent that the requirements and service loads for improved rail fasteners are quite complex. A review of the major failure modes for fasteners in current use is given in the following section, and this provides additional information for determining the measurement and data analysis requirements.

3.1.2 Review of Major Failure Modes

Figure 3-1 shows a typical resilient rail fastener having its major elements sufficiently well separated for illustration purposes. The rail is fastened to a steel tie plate using a flexible, preloaded spring clip. Electrical isolation is provided by the rubber tie plate pad and non-conducting load washers on the fastener bolts. The relatively thin PVC pad serves as a gasket material for the rail contact surfaces and would also provide electrical insulation if it were not short circuited by the spring clips. The rubber pad serves as the flexible element and the pad geometry governs the ratio between the effective vertical and lateral fastener stiffness at the rail head. Mechanical springs are used on the fastener bolts to allow vertical tie plate deflections in both directions and to maintain a relatively constant preload on the fastener components and the fasterner restraining bolt.

The fastener shown in Figure 3-1 is not known to be in current use in the United States, so the typical failure modes which will be reviewed do not necessarily apply to the illustrated design. However, this typical fastener does demonstrate all of the components which have been identified as problem

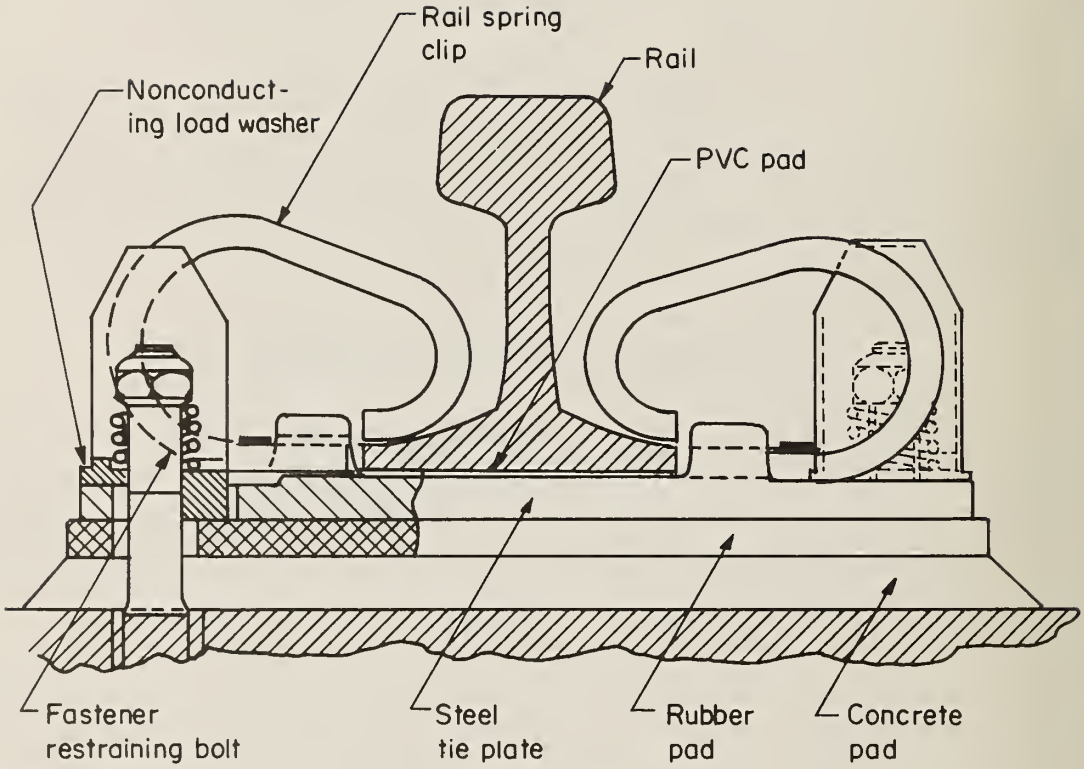

FIGURE 3-1. TYPICAL RESILIENT FASTENER

sources in other fasteners. The predominant failure modes are reviewed briefly as follows:

(a) Rail spring clip failure. The rail clip is a major component of rail fasteners and a failure of this component results in a loss of holding capability. Rail clips may fail due to the initiation of fatigue cracks, yielding or fracture, or excessive wear. Fatigue failures result from the cumulative damage caused by initial stress and many cycles of fluctuating stress during service. Generally, a fatigue failure results from a crack being initiated in a local region of high stress and then propagating under repeated cyclic loading until the component fails abruptly. A yielding or fracture failure, on the other hand, is usually caused by a single, very high load that could occur at any time during service. The rail clip can wear at the contact surfaces between the clip and the rail and at the interfaces between the clip and clip fasteners. Wear contributes to a loss of holding power by reducing the clip preload and wear of the rail base can cause a stress concentration which could increase rail failures due to fatigue.

(b) Loose fasteners. The fastening components can become loose due to wear at interfaces or loading which causes threaded members to rotate or deform plastically. Insufficient preload is often a design or installation deficiency contributing to this problem.

(c) Deterioration of rail pads or tie plate pads. Most rail fasteners have a nonmetallic material that is used between the base of the rail and the fastener plate and/or between the fastener plate and the tie or concrete invert. Abrasion and wear or excessive deformation under service loading are the major causes of deterioration. This can contribute to the fasteners becoming loose and also to the loss of electrical insulation. Material degradation from weather, aging and contamination is also important.

(d) Loss of electrical insulation. This is an important failure mode, particularly for urban rail systems. The major causes of

this failure mode are accumulation of debris, wear of insulating parts, fracture of insulating parts, and material degradation from the environment.

(e) Fastener pull-out. The loss of hold down capability where the fastener is attached to the concrete invert or concrete tie has been an important failure mode. These failures have been caused by fatigue loading during service and they have also resulted from failures that occur initially as the fasteners are installed. The actual loads transmitted into the concrete are quite dependent on the fastener design configuration, the quality control during manufacture, and the build up of construction tolerances during installation.

The important mechanisms governing fastener failures are fatigue from cyclic loading, yielding or fracture due to a single high load, wear at contacting surfaces where there are significant normal loads and relative motions, and deterioration from the environment. The data that are needed to design improved rail fasteners are quite extensive. Current fastener specifications [3-7] for mainline railroad track include a series of static and repeated loading tests for fastener evaluation. The loads are based on average expected wheel loads and estimates of the fraction of wheel load carried by each fastener. However, these specifications are not based on a statistical description of service loads that is adequate for describing the probability of peak load occurrences or for accurately predicting service life based on fatigue failures or wear. No comparable information is available for rapid transit track.

3.1.3 Evaluation Objectives and Data Requirements

The development of data requirements for rail fasteners has been directed toward three basic objectives which were selected in response to the review of fastener service loads and failure modes given in Sections 3.1.1 and 3.1.2 These objectives are:

- The development of improved criteria for fastener design
- The design of laboratory tests to simulate fastener service loads with sufficient accuracy to predict service life

- The development and verification of analytical models describing rail fastener mechanics.

The data requirements have been evaluated independently for these objectives in order to identify significant differences. However, many of the data requirements are similar. Therefore, a measurement program which is designed for one objective can be expanded to obtain the data needed for all three objectives without a proportionate increase in complexity.

There are several aspects of track mechanics that have a significant influence on the data requirements for all three objectives. The rail transmits forces to the rail fasteners from vehicle wheel loads and thermal loads. The rail is also a source of initial preloads required to make the rail conform to the space curve defined by the relative location of adjacent fasteners. These latter loads can be relatively severe on concrete track structures when rail straightness deviations are close to maximum manufacturing tolerances or the fastener installation does not have sufficient adjustability to compensate for irregularities in the concrete structure. In general, the rail loads the fastener in the vertical, lateral, and longitudinal directions and produces a yaw moment about the vertical axis, a rollover moment about the rail longitudinal axis, and a pitch moment about the lateral axis.

It is important to realize that track is an indeterminant structure so that the fastener load environment is quite dependent on the fastener stiffness in the different loading directions. With a fixed wheel load applied to the rail and uniform support by each fastener, the portion of the wheel/rail force transmitted to individual fasteners is determined by the overall track stiffness governed by the rail size and the stiffness of the fasteners and support structure. A single rail fastener typically carries from 40 to 60 percent of a vertical wheel/rail load and from 60 to 80 percent of a lateral load. In addition to determining the distribution of the wheel/rail loads on individual fasteners, the track stiffness characteristics affect the magnitude of the dynamic wheel/rail forces that result from interactions between the rail vehicles and track as a dynamic system.

Because fastener loads are a function of the overall track stiffness to which the fastener stiffness represents a significant contribution (particularly on concrete invert), two different approaches were considered for making

a statistical evaluation of the fastener service environment. The first approach would be to conduct a measurement program which included each of the different types of urban rail track construction that are available. Data from this type of program could be used to compare results for particular track constructions. The major disadvantages of this procedure are the inconvenience and increased cost of making measurements on several different properties and the limited value of obtaining data for a restricted range of fastener stiffnesses which may not include the design parameters desired for improved fasteners.

The alternative to evaluating existing track and fasteners is to design specific test track sections to cover a selected range of rail fastener and track stiffness characteristics. This might be relatively easy to accomplish by using an existing fastener where the vertical and lateral stiffnesses are determined by the material properties and geometry of an elastomeric pad. Replacement pads covering a range of stiffnesses could be designed so that the measured load environment could be related directly to track stiffness variations. A section of concrete invert constructed on a rock foundation represents a support structure having maximum rigidity where the resilient fastener performance is the most critical. A disadvantage of this approach is that it may be necessary to design and install an entirely new fastener over a relatively long track section to obtain data for the desired variation in vertical and lateral stiffnesses. However, this would permit the use of a tie plate load cell design that is not restricted by the necessity for replacing a particular existing fastener.... a distinct advantage which will be discussed in a later section of this report.

Table 3-2 gives an extensive list of possible data that could be measured to describe fastener performance in service. These have been classified into the four groups of wheel/rail loads, fastener loads, fastener motion, and fastener component loads for discussion purposes. The relative importance of each data parameter has been evaluated to determine a priority ranking for meeting the three objectives of laboratory life test, fastener design criteria, and analytical model development and validation. The priorities listed in Table 3-2 are ranked from I to IV in order of descending priority.

TABLE 3-2. PRIORITY RANKING OF RAIL FASTENER DATA REQUIREMENTS

	Laboratory Life Test	Fastener Design Criteria	Analytical Model Validation
I. Wheel/Rail Loads			
a. Vertical (V)	III	II	I
b. Lateral (L)	III	II	I
c. L/V	III	II	I
d. Longitudinal (L_o)	III	III	II
e. L_o/V	IV	III	IV
II. Fastener Loads			
a. Vertical (V)	I	I	I
b. Lateral (L)	I	I	I
c. L/V	I	I	I
d. Longitudinal (L_o)			
1. Thermal	II	I	II
2. Dynamic	II	II	II
e. L_o/V	II	II	II
f. Rollover Moment (M_r)	I	I	I
g. M_r/V	I	I	I
h. Long. Pitch Moment	III	III	III
i. M_p/V	IV	IV	IV
j. Yaw Moment (M_y)	III	III	III
k. M_y/V	IV	IV	II
III. Fastener Motion			
a. Vertical Disp.	II	I	I
b. Vertical Rail & Tie Accel.	III	III	II
c. Lateral Rail Head Disp.	I	I	I
d. Lateral Rail Base Disp.	III	II	I
e. Lateral Rail & Tie Accel.	IV	IV	II
f. Rail Roll Angle	II	II	II
g. Rail Long. Disp.			
1. Thermal	I	I	II
2. Dynamic	I	I	III
h. Rail Pitch Angle	III	III	III
i. Rail Yaw Angle	III	III	II
j. Track Gage	NA*	I	I
IV. Fastener Component Loads			
a. Hold-Down Loads	I	I	I
b. Rail Clip Stress	IV	IV	IV

(*) NA - Not Applicable.

Although the measurement of fastener loads has the highest priority for determining the fastener environment related to all of these objectives, the measurement of wheel/rail loads is important for validating analytical models of track structures and also as a method for obtaining a better statistical description of the effect of variations in track geometry (curves, grades, etc) and track condition (geometry errors, track stiffness variations, joints, etc). While selected track locations can be instrumented to measure fastener loads, there is no way to insure that the locations selected would give a reliable statistical description of the loading environment. Therefore, a continuous measurement of wheel forces over a long section of track supplements the data obtained at selected track locations. However, some approximations would be required to relate maximum wheel/rail forces to maximum fastener loads at locations where the track is not instrumented.

The category of wheel/rail load data includes the three principal loads in the vertical, lateral, and longitudinal direction, and the lateral/vertical load ratios. Longitudinal wheel loads are judged to be of minor importance for the fastener. The most important requirement for vertical, lateral, and L/V wheel load data is to provide a complete data set for validating track analytical models by correlating the wheel forces with fastener loads and motions. These wheel load data are of secondary importance for the other objectives compared to direct measurements of fastener loads.

The category of fastener loads includes a complete set of forces and moments that are transmitted from the fastener to the tie. The highest priority data for our objectives are the vertical, lateral, and L/V loads and the roll-over moment and moment ratio (M_r/V) at the rail base. These are the major loads used in the current fastener specifications for which an accurate data base is needed. The vertical load is used as the reference parameter for the load ratios to emphasize the need for correlating the phase relations for the various loads with the vertical load application. Fasteners typically exhibit quite nonlinear load deflection characteristics which are strongly dependent on the vertical load on the elastomeric elements.

The longitudinal fastener load has been evaluated using separate categories for quasi-steady loads from thermal effects and dynamic loads from traffic. The thermal loads are important for fastener design where it is necessary to work

within an allowable range for the longitudinal slip force (see Section 3.1.1). However, the longitudinal displacement of the rail base relative to the fastener will provide better data for laboratory test and design specifications than dynamic longitudinal load measurements.

The relative importance of moments and rotations in the pitch direction can be evaluated approximately by using the analytical results for rail displacement and rail slope resulting from a vertical load on the rail. Maximum rail rotations per inch of vertical displacement occur for light rail sections installed on a rigid support structure. However, the maximum displacement at the edge of the fastener due to rotation is usually less than 10 percent of the maximum vertical displacement due to the vertical load. This type of analysis plus practical experience has been used to justify the low priority rankings assigned to motions and loads in the pitch and yaw directions.

Although fastener loads are key factors for test, design and model validation, the response of the fastener in terms of deflections under service loading is also important because the rail deflection is more directly related to safety aspects such as excessive gage and rail rollover. The combination of fastener load and rail motion relative to the fastener is also important for failure modes due to wear. For these reasons, lateral displacement of the rail head for one rail, track gage, and longitudinal displacements are recommended for the highest priority category. Vertical displacement data will be useful for developing and validating analytical models, and for fastener design, but it is of secondary importance for test purposes where the tests will be load-controlled.

The category of fastener component loads includes only the hold-down forces in the fastener restraining bolts and stresses in the rail clip. Both of these parameters depend on the particular fastener design configuration, but the frequent occurrence of failures of the fastener attachment to the support structure makes it necessary to give this measurement a high priority in any test program. Instrumenting the rail clip is only recommended when the performance of a particular fastener design is being investigated. Therefore, it has been given a low priority in this program where obtaining data applicable to a general class of fasteners is the major objective.

3.1.4 Measurement Parameter Selection and Specifications

The measurement parameters and instrumentation requirements for obtaining a detailed description of rail fastener performance under traffic are discussed in this section. The measurement parameters listed in Table 3-3 have been selected to provide the highest priority (Priority I) data listed in Table 3-2 for all three evaluation objectives. The number of measurements could be reduced somewhat by concentrating on one particular objective, but there appear to be sufficient commonality to justify an inclusive program.

The measurement parameters listed in Table 3-3 can be measured directly by specific transducers. Several other lower priority parameters could be determined indirectly by the proper combination of two or more primary measurements. For example, rail head lateral and rail base lateral displacements can be used to determine rail roll angle. This could be done at track side with the proper summing networks at the expense of an additional data channel, or it could be done during the data processing stage by adding the appropriate calculation in a computer program. A third approach would be to sum the signals by analog techniques before the data are digitized.

Figure 3-2 illustrates the location of each measurement parameter at one fastener location. The reference letters refer to Table 3-3. The number of channels identified in Table 3-3 are based on the active recording of data from only one fastener. However, a measurement of rail head lateral displacement is included for the opposite rail (Item h) to determine dynamic gage. All deflection measurements for the fastener system will be referenced to the concrete invert or concrete tie. The specifications for each basic type of transducer recommended for this program are discussed separately.

3.1.4.1 Rail Fastener Load Cells.

The loads transmitted from the rail base to the fastener are one of the fundamental measurements to be made during the test program. The vertical and lateral loads at the rail base, see Figure 3-2, are the main parameters to be measured by the rail fastener load cells. A longitudinal load measurement has been considered, but isolation and measurement of loads in three axes is

TABLE 3-3. SUMMARY OF MEASUREMENT PARAMETERS AND TRANSDUCER REQUIREMENTS FOR EVALUATING RAIL FASTENER PERFORMANCE

	Measurement Parameter	Transducer	Maximum Range	Number of Channels
a	Rail Base Vertical Load ($R_1 + R_2$)	Rail Fastener Load Cell	20,000 lb	1
b	Rail Base Lateral Load (R_3)	Rail Fastener Load Cell	$\pm$ 20,000 lb	1
c	Rail Base Rollover Moment [$r(R_2 - R_1)$]	Rail Fastener Load Cell	$\pm$ 100,000 in-lb	1
d	Rail Base Vertical Deflection (δ_1)	DCDT	$\pm$ 0.25 in	1
e	Rail Base Vertical Deflection (δ_2)	DCDT	$\pm$ 0.25 in	1
f	Rail Base Lateral Deflection (δ_3)	DCDT	$\pm$ 0.25 in	1
g	Rail Head Lateral Deflection (δ_4)	DCDT	$\pm$ 0.50 in	1
h	Rail Head Lateral Deflection (δ_5)	DCDT	$\pm$ 0.50 in	1
i	Vehicle Speed & Wheel Position	Wheel Detector	120 fps	2
j	Rail Web Longitudinal Strain	Strain Gage	2000 μin/in	2
k	Fastener Bolt Force	Load Washer	80,000 lb	2
l	Vertical Wheel/Rail Force (P)	Instrumented Wheel Set	30,000 lb	2
m	Lateral Wheel/Rail Force (Q)	Instrumented Wheel Set	20,000 lb	2

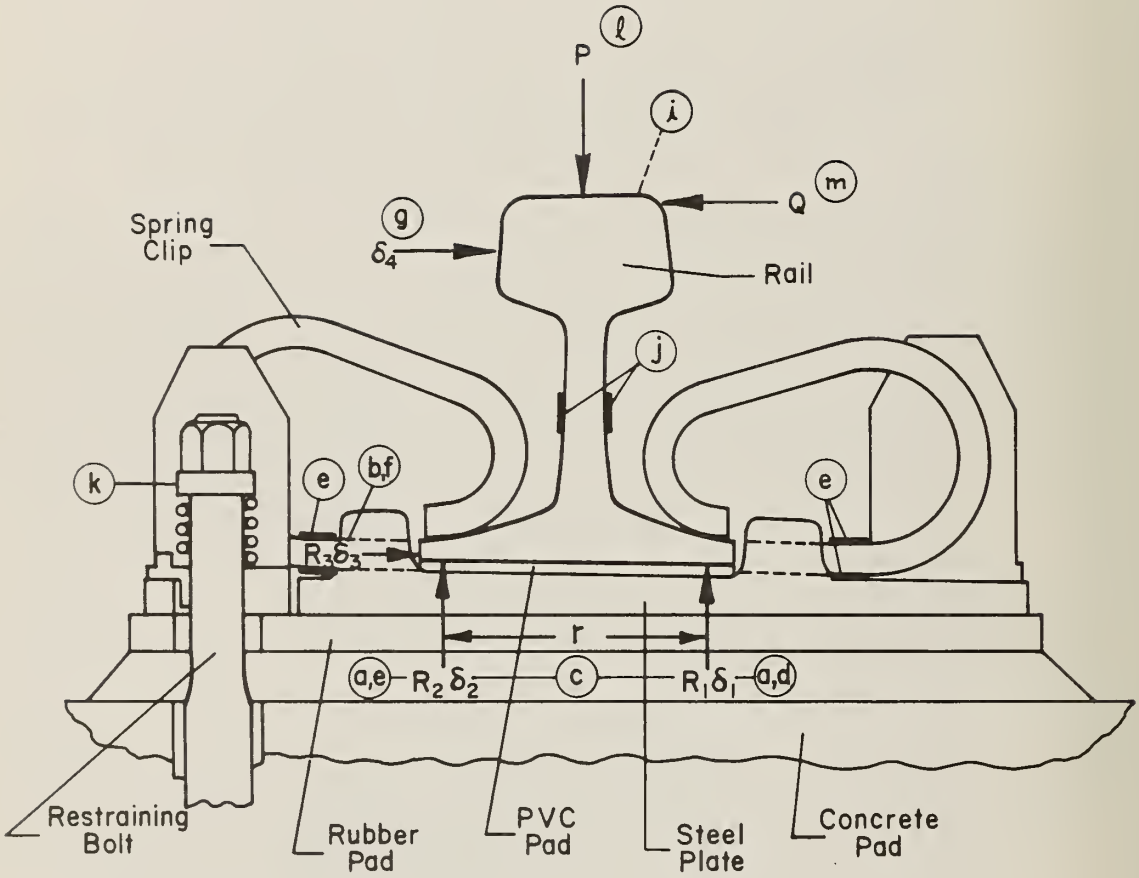

FIGURE 3-2. RAIL FASTENER MEASUREMENTS

extremely difficult and is not justified based on the lower priority ranking for these data. The final design and fabrication of the load cell, in any case, will not be a simple task. Before this is accomplished, the specific track structure and fastener should be selected and limitations on the design should be clearly defined. That is, factors such as whether or not some concrete beneath the fasteners can be removed or whether the mounting studs can be removed and replaced must be determined prior to the detailed design of the load cell.

The general performance requirements (design goals) for the load cell are listed below. These requirements are based on experience with this type of instrumentation and the service loads discussed in Section 3.1.1.

- Maximum Load: 20,000 lb vertical, 20,000 lb lateral, 100,000 in-lb overturning moment
- DC nonlinearity and hysteresis: $\pm$ 3 percent
- Cross talk: $\pm$ 3 percent
- Sensitivity: greater than 2mV/V/F.S.
- Frequency Response: DC to 100 Hz, + 1 dB, - 3 dB (installed)
- Temperature Coefficient Sensitivity: 0.02 percent/^{o}F
- Temperature Coefficient for Zero Shift: 0.02 percent/^{o}F.

Sensitivity of the load cell can be relatively high for this application due to the low number of loading cycles that it will be subjected to during the program (10,000 to 100,000). It is not likely that this load cell will have "universal" applications so the design life can be considered finite. As a minimum requirement, the load cell stiffness should be at least 10 times and preferably 20 times greater than the stiffness of the hardest elastomeric pad to be tested. A detailed evaluation of existing load cell designs is discussed in Section 4.1.

3.1.4.2 Deflection Measurements

The requirements for deflection measurements will range primarily from 0.10 to 0.50 in. full scale. Frequency response should be on the order of 100 Hz, and high resolution with low hysteresis is needed so that small deflections associated with a stiff fastener can be measured with the same transducers (but

with increased gain) used to measure the response of a flexible fastener. The results of a detailed evaluation of displacement transducers for meeting these requirements are given in Section 4.3.

3.1.4.3 Bolt Force

Measurement of the clamping force provided by the fastener bolts can be accomplished with commercially available transducers designed for this purpose. Capacity of the transducer varies with the bolt size; for example, standard capacity for a 1-in bolt is 80,000 lb. Transducers for measuring bolt force are discussed in Section 4.5.

3.1.4.4 Strain Gages

Strain gages will be used to measure rail thermal loads. The test section will most likely be welded rail, so field installations will be required. Weldable gages compensated for the test site temperature range are recommended for this application. If strain gages are used on fastener components, they should be installed in a laboratory or other protected area to improve the reliability of the gage installation. See Section 4.4 for additional detail.

3.1.4.5 Vehicle Position and Speed

An accurate measurement of wheel position with time, the total number of axles, and vehicle speed are needed for data processing. These data will be used to provide a time correlation for events along the rail and to identify sampling intervals for peak detection and an overall wheel count. The techniques for wheel detection are discussed in Section 4.6.

3.1.4.6 Instrumented Wheel Set

A wheel set which is instrumented to measure vertical and lateral wheel/rail forces is an important source of data for this program. It can be used to document track characteristics during the initial selection of a test site. It

can also be used during the test program so that wheel/rail forces can be correlated directly with fastener response measurement. Therefore, the wheel set should be capable of providing a continuous measurement of loads to make this correlation possible. Combined system accuracies should be better than ± 7 percent to insure valid data correlation. Frequency response should be flat within + 1, - 3 dB to 100 Hz, which is above the maximum frequency for which significant rail fastener response has been observed. Instrumented wheel sets are discussed further in Section 4.2.

3.1.5 Data Analysis Recommendations

Figure 3-3 shows some typical data for the time history of vertical tie plate force for a 4-car train. The tie plate load displays the effect of individual axles and trucks, and the significant loading is restricted to the time during which a train is quite close to the measurement loaction. With the exception of some slowly-varying thermal loads, most of the fastener measurement parameters recommended previously in Table 3-3 will display this characteristic response.

Fastener data are considerably different than wheel/rail force data obtained from an instrumented wheel set. Both vertical and lateral vehicle-borne wheel/rail force measurements would appear as a continuous random signal superimposed on a variable mean load. The principal objective of analyzing wheel/rail force data related to fastener performance is to provide a correlation between the fastener and wheel forces and to obtain a statistical description of the maximum wheel/rail forces over long sections of track.

The objective of analyzing fastener response data is to provide a statistical description of the service environment that can be used for validating analytical models and developing laboratory life tests and design criteria. Table 3-4 summarizes the analysis methods which are recommended for meeting these objectives. The reasons for selecting these particular data analysis methods are discussed in the following sections.

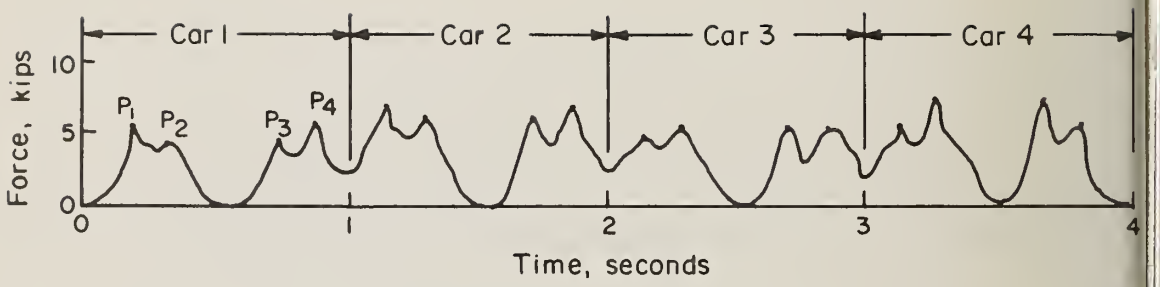

FIGURE 3-3. TYPICAL DATA FOR VERTICAL TIE PLATE FORCE FOR A 4-CAR TRAIN AT LOCATION 1

TABLE 3-4. SUMMARY OF DATA ANALYSIS REQUIREMENTS FOR RAIL FASTENER EVALUATION

Measurement Parameter	Analysis Model	Laboratory Test	Design Criteria
Fastener Loads and Moments	TH, PAPD, PSD	TH, FS, PAPD	PAPD, FS
Fastener Displacements	TH, PAPD	TH	PAPD, FS
Track Gage	TH	-	PAPD
Rail Web Strain	TH	TH	APD
Fastener Bolt Force	TH	TH, FS	TH, APD, FS
Wheel/Rail Forces (instrumented wheel)	TH, PSD	-	PAPD

Nomenclature

APD - Amplitude Probability Distribution and Density Analysis (mean value and standard deviation included)
PAPD - Peak Amplitude Probability Distribution and Density Analysis (mean value and standard deviation included)
FS - Fatigue Statistics
TH - Time History
PSD - Power Spectral Density

3.1.5.1 Time History

Recordings of the time history (TH) of each measurement parameter are the most basic data that will be obtained from this program. These records will be invaluable for verifying the validity of the data and for demonstrating the actual performance of the fastener under traffic. The time history data will be particularly useful for the development and verification of analytical models where the time sequence for loads and displacements is a key factor. Selected time histories may also provide the best description of fastener loads to use as input data to simulate field conditions in the laboratory.

3.1.5.2 Amplitude Statistics

Statistical descriptions of load and displacement amplitudes are needed to establish probabilistic design and test criteria that are pertinent to fastener failure modes. Many failures and limits on maximum displacements of the rail head are governed by the infrequent occurrence of a very high load or displacement. The probability that a maximum, or peak, value will exceed any selected limit is provided by a peak amplitude probability distribution (PAPD) or its derivative, the amplitude probability density function. These two functions, together with the mean value and standard deviation which would be calculated simultaneously, are the key data analysis procedures recommended for this program. The data for a PAPD analysis would be collected in the data processing stage by identifying and collecting a single peak value for each axle pass, e.g. P_1, P_2, ... in Figure 3-3.

Measurement parameters which have a constant mean value independent of train passage, such as the total force in a fastener bolt or rail strains due to thermal effects, can be evaluated differently to describe the total variation of the amplitude. An amplitude probability distribution (APD) of a continuous signal gives the probability (percent of time) that the amplitude, rather than just the peak amplitude, exceeds any selected limit. It is convenient to remember that a random signal which has normal, or Gaussian, amplitude statistics will have a Rayleigh probability density function when only the peak values are analyzed.

Figures 3-4 and 3-5 show an example format for presenting probability distribution and density data. This format can be used to demonstrate fastener performance with different pad stiffnesses or for comparing fastener performance at different track locations. The example shown represents peak vertical fastener loads where the mean value of the peak loads would be expected to increase as the fastener stiffness increases.

A more detailed discussion of the calculation procedures and the relationships which govern the trade-offs between estimation accuracy and the data sample size are given in Appendix A.

3.1.5.3 Fatigue Statistics

Fatigue statistics describe strain data and load data in a manner which can be used to quantify fatigue damage potential and to design laboratory tests which provide accurate service life predictions. While there is no universally accepted method for obtaining fatigue data, all of the better methods are based on describing a fluctuating signal by determining a mean value and a range for each cyclic variation. The rain flow method of analysis is recommended for this program because it is a relatively comprehensive cycle counting procedure, and it includes sequencing effects. The results, which are in the form of a sequenced list of mean value and range for each cycle, can then be processed to provide an environmental load spectrum based on a selected cumulative damage theory.

Fatigue statistics of fastener loads and the fastener bolt force are needed to design laboratory tests, as shown in Table 3-4. They will also be needed so that fastener design can be based on a more realistic life expectation, in addition to having sufficient strength and stiffness for occasional peak loads. A review of the techniques for utilizing service load measurements for fatigue design analysis and life tests is given in Appendix B.

3.1.5.4 Power Spectral Density

A power spectral density analysis identifies the frequency content of a selected signal. These data will be most useful for developing and evaluating

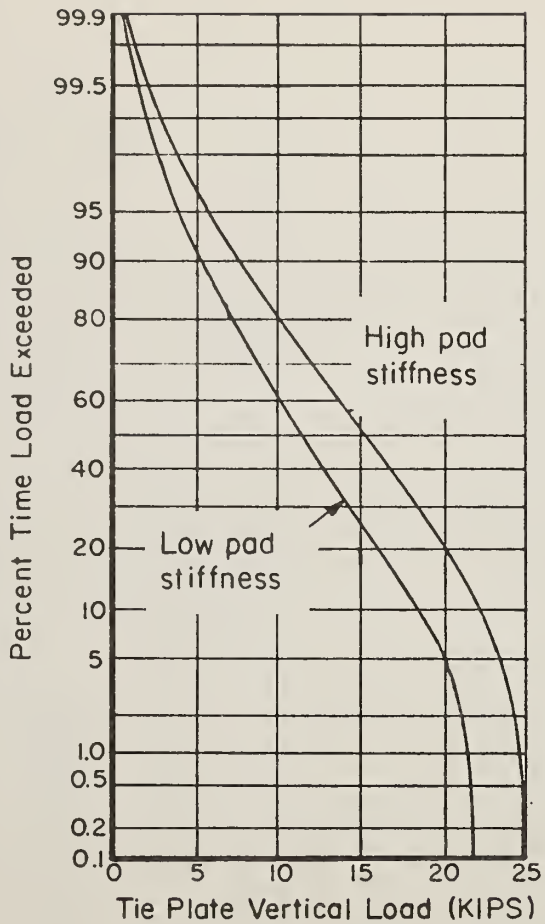

FIGURE 3-4. SAMPLE FORMAT FOR AMPLITUDE PROBABILITY DISTRIBUTION OF PEAK VERTICAL FASTENER LOADS

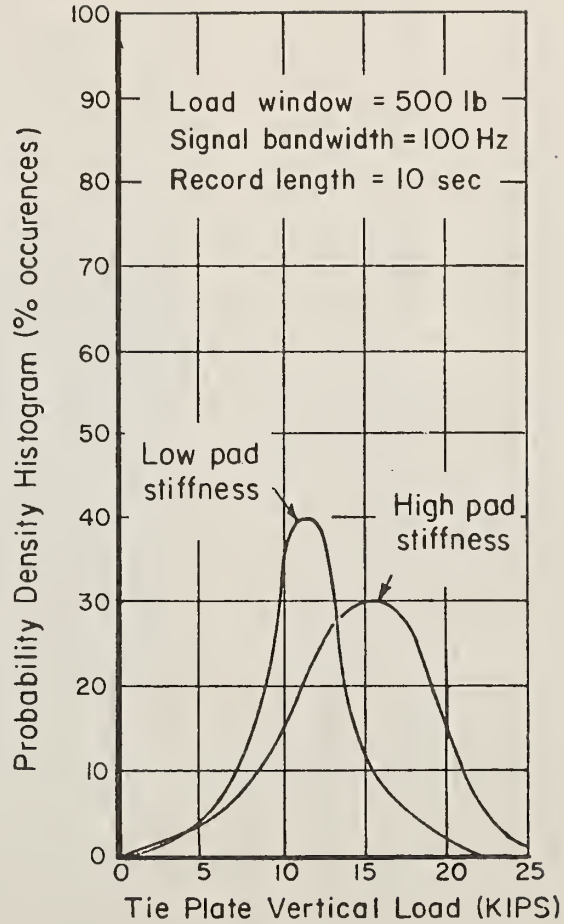

FIGURE 3-5. SAMPLE FORMAT FOR AMPLITUDE PROBABILITY DENSITY PEAK VERTICAL FASTENER LOADS

analytical models of fastener behavior. The standard deviation can be obtained from the integral of the power spectral density, but this can be obtained more directly from amplitude statistics. The power spectrum will be most useful for identifying cause and effect relations by comparing the PSD's for wheel forces to those for the loads transmitted through the fastener. It is expected that much of the high frequency content of the wheel/rail forces will be attenuated by the fastener.

3.1.6 Data Processing

The data analysis techniques recommended for specific data parameters were discussed in the previous section. However, the overall operation of the measurement program must be considered in formulating the data processing procedures.

The fastener load environment in a rapid transit system will vary with traffic conditions and ambient temperature (thermal loads). A 24-hour measurement period during a normal business week is recommended for obtaining a representative statistical sample of traffic variations. Although it is recognized that this neglects the reduced traffic on weekends and some very high traffic conditions on special days of the year, data from a 24-hour period should give an adequate description of traffic conditions pertinent to fastener design.

The capability for subdividing the 24-hour data into selected time intervals for special-purpose analysis using time of day identification should be provided. The minimum time period can be selected based on the data sample size required to estimate the amplitude statistical parameters within desired accuracy limits. For example, two hours is probably the shortest time period of interest, and peak value data from 600 axles will give adequate probability density estimates, see Appendix A. This requires a minimum traffic density of 75 cars per hour. Lower traffic densities will reduce the confidence level of the statistical parameters or require a longer minimum time band.

Speed variations will also be an important influence on fastener loads. Speed bands of 10 to 15 mph should be adequate, and the same statistical restrictions will govern minimum sample sizes. The use of a 24-hour measurement period will include a representative day-to-night temperature variation, but obtaining data for seasonal variations will require repeated measurement periods.

The previous discussion identifies the requirements for obtaining statistical data at a single track location. These data will include the effect of variations related to vehicles such as speed, passenger load, vehicle type, and condition. However, measurements of fastener performance at different track locations will be needed to identify the effect of spatial variations, such as fastener installation, support structure stiffness, and track geometry. The number of independent track locations should be selected to provide a statistically reliable estimate of the variation in mean value and standard deviation of peak loads that can be attributed to spatial variations. As discussed in Appendix A, a minimum of six fastener locations positioned at random intervals in the test section are recommended. The minimum test section length L can be selected using the relation $L \geq V/f_o$, where V is the average train speed and f_o is the lowest natural frequency of the vehicle suspension. This test section length will be sufficient to identify variations in fastener loading due to low-frequency car body dynamics. And the random location of the fasteners will provide data on the higher-frequency, shorter wavelength variations. An example calculation using 0.8 Hz for the lowest natural frequency and a train speed of 80 mph indicates a minimum test section length of 150 ft would be required. A lead-in section of about four times this length, or 600 feet, is recommended when pad stiffnesses which are different from those in the original track are used. This gives a total test section length of 750 ft for altering all of the fasteners to obtain a different stiffness. This length is recommended for single-direction traffic. A length of 1350 feet would be needed for 2-direction traffic.

The decision for installing separate instrumentation at each of six locations rather than moving one set of instrumentation six times will be governed by the efficiency and costs involved. Traffic data from similar 24-hour measurement periods should be sufficiently identical to make simultaneous measurements unnecessary.

The data processing requirements which are common to rail fastener and rail joint measurements are discussed in Appendix C and the data acquisition system requirements are discussed in Appendix D. The highest frequencies of interest for the fastener measurements will probably not exceed 100 Hz. This will require a minimum sampling rate of 500 Hz for analog to digital conversion. As discussed previously, train identification, rail temperature, track location, time of day, and train speed codes would be needed for processing the data.

3.1.7 Test Site Selections

The choice of a test site includes selecting a specific fastener configuration, the type of track construction, the operating property, and the desired traffic conditions governed by vehicle size, traffic density, and vehicle speeds through the test location. It is also necessary to choose between a curve or tangent track location. Once these fundamental decisions have been made, the selection of the particular location for the measurements should include an evaluation of the roadbed condition and the practical aspects of conducting a track measurement program under traffic. Criteria for making these decisions are discussed in the following sections.

3.1.7.1 Track Construction

Track construction for urban rail track includes wood or concrete ties on ballast for at-grade and some subway track and a variety of concrete invert construction for subways and elevated viaducts. To maximize the effect of fastener performance, and isolate this performance from other track system interactions, it is recommended that measurements be made on concrete invert laid on bed rock, or an otherwise rigid and uniform foundation or structure. This type of construction requires that most of the vertical track compliance be provided by the flexible element of the fastener.

The resilient fastener selected for the measurement program should provide a good degree of isolation between roll stiffness and vertical stiffness. The ability to change a simple elastomeric pad to vary vertical stiffness without substantially altering roll stiffness is a major consideration. This will provide the opportunity to make independent changes in the vertical and lateral spring rates.

3.1.7.2 Traffic Conditions

A location having a relatively high traffic density of one vehicle type (preferably a recent vintage) operating in a single direction (2-track line) near the maximum design speed for the system should be selected to reduce some of the variables. The selection of a maximum speed zone will provide data for maximum

dynamic loads. With the cooperation of the operating property, a limited number of trains could then be operated at reduced speeds to document speed effects.

3.1.7.3 Site Location

It is recommended that the track section selected for the fastener measurements program be concrete invert installed on a rigid foundation. The installation will, of necessity, be of recent construction if it incorporates a resilient fastener suitable for this test program. Uniformity of the candidate locations and final selection of a test site should be based on a review of track maintenance records and a survey of the track condition using track impedance measurements, modulus measurements, and/or a geometry measurement car. To document the lateral performance of the rail fastener, it is recommended that the test site be located on a curve where the maximum normal operating speed gives an unbalanced superelevation approaching 3 inches.

Operational requirements will also have an important influence on site selection. Easy and safe accessibility of the site for personnel and equipment is a necessity, and this may conflict with other requirements. The location should also allow for traffic to be conveniently diverted to another track during installation and checkout of the instrumentation. This is preferable to one where access is limited to early morning hours or Sundays because it may be necessary to unbolt and lift a relatively long section of rail requiring several hours of down time. This, of course, will require the cooperation of the operating property in providing a track maintenance crew and their equipment.

The operation of the instrumentation and data acquisition systems, small power tools, and the test van or trailer will require 115 VAC power. Total power requirements depend on the final design, but a maximum of 5 KVA should be adequate for normal operating conditions. Availability of this power is another consideration for site selection, but this should be a relatively easy requirement to satisfy.

It is anticipated that EMI noise caused by the high power return in rails and RFI noise from the arcing of the third rail contact and the traction motors on the cars may be a significant source of problems for the measurement systems, particularly for strain gages mounted on the rails. The gages cannot

be effectively shielded from the EMI because of their close contact with the rail. Reduction of the strength of the electromagnetic field can be achieved, however, by shunting or by-passing the current through a separate conductor around an electrically isolated track section which contains the instrumented rail. This would shift all or most of the return current from axles within the isolated section to the opposite rail. The return current from axles outside the isolated section would be shunted around the instrumented rail. It is not known whether this would be sufficient to resolve the problem, so verification of the magnitude of this problem is recommended before the measurement program is initiated.

To minimize the effect of the RFI, the test site should be selected so the data acquisition system can be located on the side of the track opposite the third rail a sufficient distance from other potential noise sources such as electrical substations and high-power transmission lines. Electrical noise from the signaling system should not be a problem.

3.1.7.4 Operating Property

The most important criteria for selecting a particular transit property for a measurement program are the interest and cooperation that can be expected from the property staff who will be helping with the program. It is also desirable that the selected track location be recognized by the U. S. rail transit industry as an up-to-date design that is suitable as a basis evaluating improvements.

3.2 BOLTED RAIL JOINTS

The degradation of standard and insulated bolted rail joints is recognized by both the railroad and the rail rapid transit industries as a major track problem. The standard bolted rail joint is more flexible structurally then continuous rail even when the joint is new and the bolts are tight. In service, the contact surfaces between the rail and joint bars are subjected to corrosion and wear which causes a loosening of the bolts and the joint. As the joint

loosens, the loading on adjacent ties and the rail deflection increases, and this causes the joint to deteriorate at a rapidly increasing rate. Higher bolt clamping forces could be used to improve joint life, but the increased friction force conflicts with the requirement for the bolted joint to slip longitudinally and alleviate rail thermal stresses.

The periodic inspection and retightening of bolted joints is a significant maintenance problem by itself. However, the degradation of track profile and the increased noise and vibration caused by loose joints are probably of even greater importance for the transit industry. Furthermore, rail fractures caused by fatigue cracks propagating from the rail bolt holes are a safety hazard attributable to loose joints.

Insulated rail joints are an even more challenging problem because materials having adequate electrical insulation properties are usually quite poor as structural materials. The short signaling blocks used by transit properties make the insulated joint a more significant problem for transit track than it is for railroad track. Short circuits at insulated joints give a false occupied block signal which delays train operations and becomes an immediate maintenance problem.

3.2.1 Joint Service Loads

Bolted rail joints are used to connect standard lengths of rail by means of a joint bar on each side of the rail web. Joint bars range in length from 24 inches for a 4-bolt joint to 36 inches for a 6-bolt joint. As the joint becomes loose, the joint bars and the rail will no longer be constrained to bend together as a continuous beam. Instead, the joint bars begin to act as separate beams with the loading applied over small contact regions at the ends of the joint bar. This significantly changes the joint loading and the corresponding stress distribution in the rail head fillets and around the bolt holes in the rail web. These are the critical areas for rail end failures.

Relative motion between the rail ends and the joint bars increases the vertical deflection of the rail for even a static load. However, the resulting dip represents a particularly severe irregularity in vertical track profile that produces high dynamic impact forces as wheels cross the joint and

impact the running-on rail. These impact loadings excite rail response in the frequency range of 500 to 2000 Hz. The dynamic system which is responsible for the impact forces is determined primarily by the effective mass of the track in the impact zone (about on foot), the unsprung mass of the vehicle, the stiffness of the track, and the contact stiffness at the wheel/rail interface.

When the car wheel crosses a dipped joint, a very short duration impact force P_1 occurs first followed by a second peak force P_2 which occurs much later, as shown in Figure 3-6a. The P_1 force typically occurs about 1/4 to 1/2 millisecond after the wheel passes the joint middle [3-8], and the period for this pulse corresponds to a frequency range of 1000 to 2000 Hz. The P_2 force peak may occur about 6 to 8 milliseconds later, which corresponds to a frequency range of 60 to 80 Hz. Plastic deformation (batter) of the rail can usually be observed close to the rail end where the P_1 force peak would be expected. This high frequency impact is reacted mainly by a short section of rail in the impact zone whereas the longer duration (lower frequency) P_2 force produces maximum track displacements and is transmitted to the ties and ballast.

Figures 3-6b and 3-6c show that the occurence of the P_1 and P_2 forces on opposite sides of one or more of the bolt holes causes a reversal in the shear strain at the first running on bolt hole. These results [3-8] show that the combination of the two peak forces governs the range of the alternating stresses and, therefore, the initiation of fatigue cracks. The results of a photoelastic study [3-1] on stresses at the rail end show that the web fillet region under the rail head is another area of high stress from the P1 impact force. Fatigue induced failures are known to occur at this loaction also.

These results indicate that data on the impact forces between the wheel and rail and correlation of these forces with the stresses and load in the joint components is a major requirement for obtaining a better understanding of joint mechanics. These loads, of course, are superimposed on the quasi-steady loads from rail thermal stresses.

A review of the major failure modes for bolted rail joints is given in the following section to provide additional information for determining the measurement and data analysis requirements.

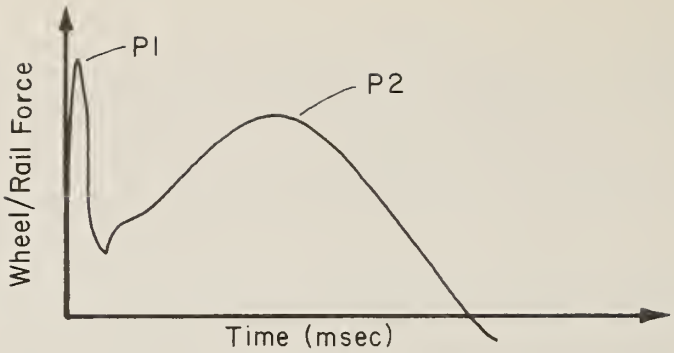

a. Rail Force at Joint Impact

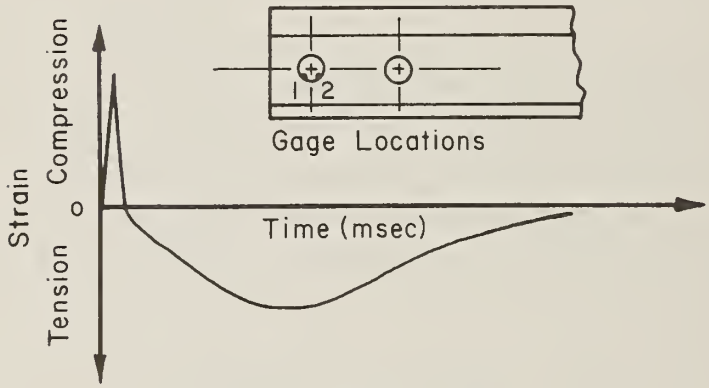

b. Strain Measured at No. 1 Gage

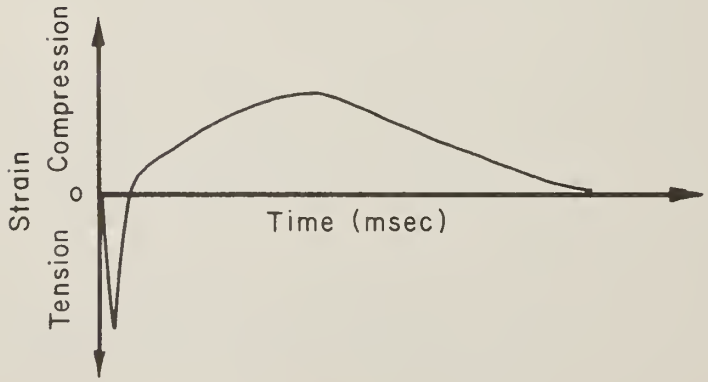

c. Strain Measured at No. 2 Gage

FIGURE. 3-6. TIME HISTORIES OF RAIL FORCE AND BOLT HOLE STRAIN MEASUREMENTS FROM JOINT IMPACT

3.2.2 Review of Major Failure Modes

A previous review [3-1] of rail joint problems established that the predominant joint failure modes are:

(a) Short circuit in insulated joints. These failures are most frequently caused by the degradation of the fiber end blocks that are positioned vertically in the gap between the rail ends. They are also caused by debonding of the insulative adhesive between the joint bar and the rail or a failure of the insulating bushings around the joint bolts. Failures of this type give a false occupied block signal which delays train operations.

(b) Bolt hole fatigue cracks. Fatigue cracks can be initiated and propagate at approximately 45 degrees from the rail axis at one or more of the rail bolt holes. Approximately 96 percent of these failures occur in the bolt hole next to the rail end. About 85 percent occur on the running-on rail end for single direction traffic and 66% occur on the lower rail on curves. These statistics are based on railroad experience. No data of this type have been located for rapid transit experience. Bolt hole cracks are the most dangerous failure mode for bolted rail joints because complex brittle fracture can be initiated from a relatively short fatigue crack.

(c) Rail head and web separation crack. This failure mode is a longitudinal fracture at the fillet under the rail head. It propagates from a fatigue crack at the end of the running-on rail.

(d) Loose joints. Although loose joints are perhaps not failures, they are a major maintenance problem and contribute greatly to other types of failure. Joints loosen because of their inherent inability to transmit wheel loads without incurring relative motion at the contact surfaces between the rail and joint bars and between the joint fastening components (bolts, nuts, washers, etc) and the joint bars. This relative motion causes wear which loosens the joint components. The increased joint flexibility contributes further to track settlement and wheel/rail dynamic forces.

(e) Rail end batter. Rail end batter is a self-aggravating form of plastic deformation and wear caused by repeated impacts of wheels with the running-on rail.

(f) Joint bar fracture. Joint bar fatigue cracks usually start at the top of the joint bar adjacent to the rail end where the joint bar is indented by repeated contact with the rail head during joint flexure.

3.2.3 Evaluation Objectives and Data Requirements

The development of data requirements for bolted rail joints is based on a recognized need [3-1] for a quantitative description of joint performance in service. The data requirements for loads, stresses, and motions at and near the joint have been evaluated for the following objectives:

- The identification of the principal mechanisms governing joint degradation and failure
- The development and verification of analytical models describing the mechanics of bolted rail joints
- The design of laboratory tests to simulate joint loading and provide life tests that correlate well with service life
- The development of improved criteria for joint design.

The criteria for the selection of a particular track construction and site location for measuring the performance of a bolted joint are discussed in Section 3.2.7. However, the intent of the measurements discussed in this section is to document the degradation of a "typical" joint as it progresses starting from new to poor condition. It is recognized that joints at different track locations will degrade at varying rates for even identical traffic. But the objective of this investigation is directed toward identifying the mode of degradation rather than the rate, and it has been assumed that the mode of degradation will be similar for most joints. Thus, a "typical" joint for this objective should exhibit the same failure mode but not necessarily the same rate of degradation of other similar joints.

In order to quantify joint performance and environment, a measurement program will require periodic data collection sessions lasting for a 24-hour period. These sessions would be repeated at 2 to 3-month intervals until the joint has deteriorated sufficiently to require extensive maintenance. Limited measurements on some other joints would be needed to verify that the joint selected for measurements did exhibit the same failure modes.

Table 3-5 lists many possible measurements that could be used to monitor joint performance. The relative importance of each data parameter was evaluated to determine a priority ranking for each of the four objectives. The priorites listed in Table 3-5 are ranked from I to IV in order of descending priority.

As discussed previously, the wheel/rail forces from traffic are expected to increase substantially as the joint deteriorates -- an accelerating mechanism. Vertical forces appear to be the primary factor in joint performance, but the fact that joint failures occur most frequently on the low rail on curves suggests that lateral wheel/rail forces should be given equal priority until their contribution can be better identified. Very little quantitative data are available on the wheel forces at joints and it is needed for each of the four objectives. An analysis of the peak forces at joints for an extended length of track is needed for a statistical description of joint loads.

Tie plate load measurements have a top priority ranking for all objectives because the support reactions provided by ties adjacent to a bolted joint are an integral part of the bolted joint. The correlation between the wheel/rail forces and the tie plate loads is needed to verify analytical models of the joint response and as a key parameter for developing tests and design criteria.

The relative displacements between the rail and joint bar and between the rail ends will be used to identify the degradation mechanism and the response of the joint components during wheel passage. These relative displacements, as well as the absolute vertical rail displacement, are expected to change considerably as the joint loosens. Data on longitudinal displacements are needed to identify the effect of track thermal loads and the relief provided by joint slip. The wear from relative motions between joint components is a major cause of joint deterioration.

TABLE 3-5. PRIORITY RANKING OF BOLTED RAIL JOINT DATA REQUIREMENTS

	Joint Degradation	Laboratory Life Test	Joint Design Criteria	Analysis Models
I. Wheel/Rail Loads				
a. Vertical (V)	I	I	I	I
b. Lateral (L)	I	I	I	I
c. L/V	II	II	II	II
d. Longitudinal (L_o)	III	III	III	III
e. L_o/V	IV	IV	IV	IV
II. Tie Plate Loads				
a. Vertical (V)	II	I	I	I
b. Lateral (L)	II	I	I	I
c. L/V	II	I	I	I
d. Rollover Moment (M_r)	II	I	I	I
e. M_r/V	II	I	I	I
III. Joint Displacements				
a. Vertical across joint	I	II	III	I
b. Longitudinal gap	II	II	I	I
c. Absolute vertical	I	I	II	I
d. Relative rail head/ joint bar (longitudinal)	I	II	II	II
e. Vertical rail accel.	II	II	III	II
IV. Joint Stress				
a. Rail bolt holes	I	I	I	I
b. Joint bar bolt holes	II	III	II	III
c. Rail Web, head, foot	I	I	I	I
d. Joint bar longitudinal	II	II	I	I
V. Joint components				
a. Bolt tension	I	II	I	I
b. Insulated joint electrical resistance	I	II	II	III
VI. Joint Noise	I	III	III	III

I - Highest priority.
IV - Lowest priority.

Strain measurements at the rail bolt holes and in the fillet region of the rail head are directly related to the major joint failure modes. These data have the highest priority for all objectives. Longitudinal strain data in the joint bars at the rail gap will be used to determine the quasi-steady thermal loads.

Bolt tension provides a very direct indication of joint condition and is a key design parameter governing joint performance. A measurement of electrical resistance across the joint is recommended for insulated joints because electrical shorts are the critical failure modes. The noise radiated from bolted rail joints contributes to community complaints about transit operations, and a noise measurement should provide a useful indication of joint condition.

3.2.4 Measurement Parameter Selection and Specifications

The measurement parameters and instrumentation requirements for documenting the performance of a typical bolted rail joint under traffic are discussed in this section. Table 3-6 lists the measurement parameters representing the highest priority (Priority I) data listed in Table 3-5 for all four evaluation objectives. The number of measurements could be reduced somewhat by concentrating on only one or two of the objectives.

Figure 3-7 shows the approximate locations for each measurement. The letters identify the measurement parameters listed in Table 3-6. A discussion for each type of transducer follows and the instrumentation installation requirements are discussed in Section 3.2.8.

3.2.4.1 Strain Gages

Strain gage installations are a fundamental part of the instrumentation, and they will remain installed for the entire program. This demands special care and preparation to insure their long-term effectiveness. On-site installation of the gages appears to be impractical under these circumstances, especially when all the other environmental effects are taken into consideration. Therefore, it is recommended that the strain gages be installed in a laboratory or other protected area. This, of course, would require handling two lengths of

TABLE 3-6. SUMMARY OF MEASUREMENT PARAMETERS AND TRANSDUCER REQUIREMENTS FOR EVALUATING BOLTED RAIL JOINT PERFORMANCE

Measurement Parameter	Transducer	Maximum Range	Number of Channels
a. Tie plate vertical load (each side of joint)	Tie plate load cell	20,000 lb	2
b. Tie plate lateral load (each side of joint)	Tie plate load cell	± 20,000 lb	2
c. Tie plate rollover moment (each side of joint)	Tie plate load cell	± 100,000 in-lb	2
d. Relative displacement between rails (vertical, longitudinal)	DCDT	± 0.25 in	2
e. Absolute vertical rail displacement	DCDT	± 1.0 in	3
f. Vehicle speed and wheel position	Wheel detector	120 fps	2
g. Rail bolt force	Bolt load washer	80,000 lb	4
h. Bolt hole strain	Strain gage	2000 μ in/in	16
i. Rail web, head and foot strain	Strain gage	2000 μ in/in	6
j. Joint bar longitudinal strain	Strain gage	2000 μ in/in	4
k. Relative rail head/joint bar displacement (longitudinal)	DCDT	± 0.15 in	1
l. Wheel/rail contact force (vertical and lateral)	Instrumented wheel set	60,000 lb	4
m. Joint impact noise	Microphone	120 dB SPL	1

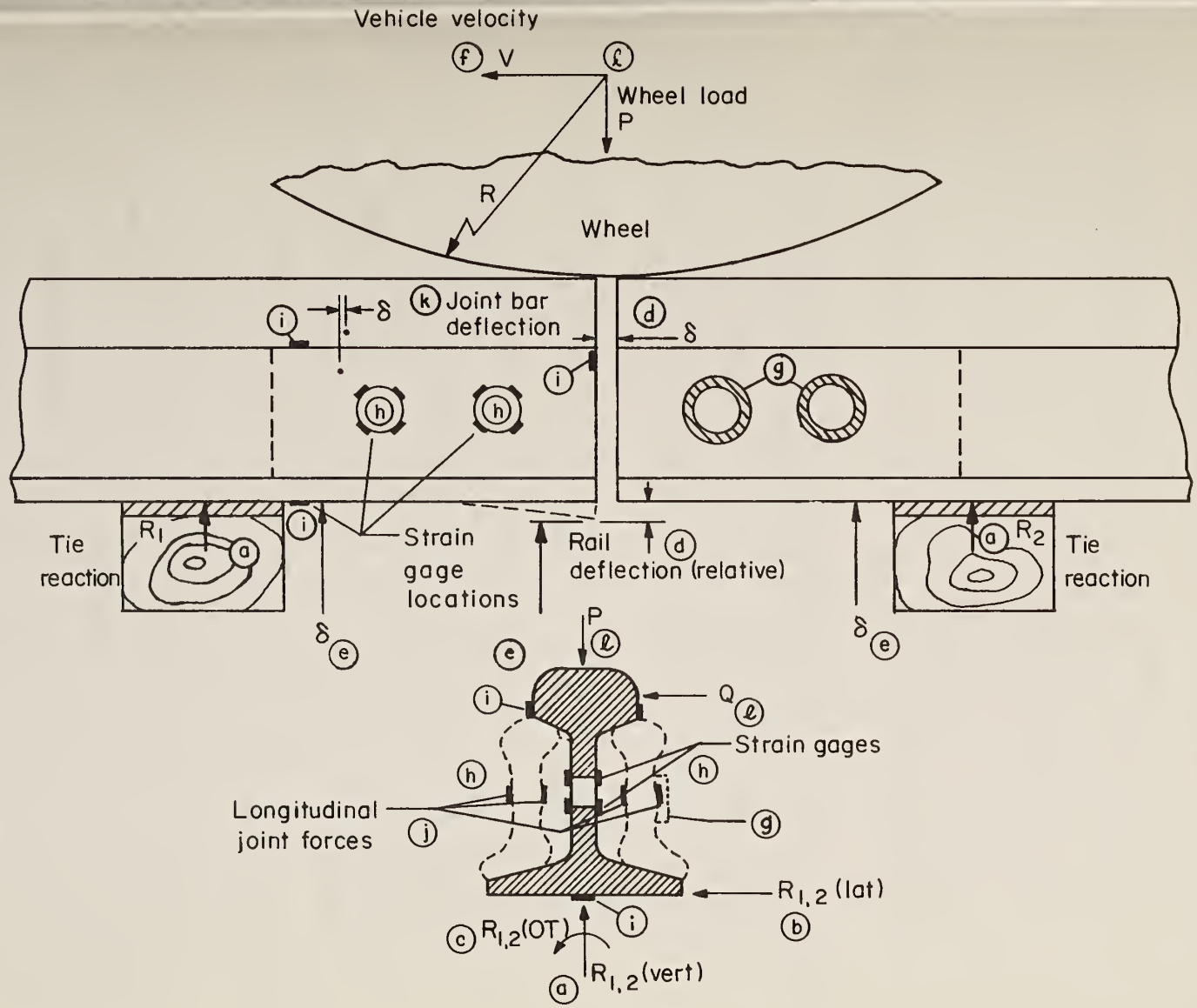

FIGURE 3-7. MEASUREMENT LOCATIONS FOR BOLTED RAIL JOINT INSTRUMENTATION

39-ft rail and all of the rail joint hardware, but the benefits listed below would justify that effort.

- New rail and joint hardware could be used to document the total history of a new joint.
- Thorough laboratory preparation of the gage installations would improve gage reliability.
- Devices to protect the circuits from weather and rodents could be installed more easily and effectively.
- Laboratory calibration and bridge balancing, compensation and trimming would improve data accuracy.

The final choice of strain gage type should be made by those responsible for instrumenting the rail. However, the following factors should be considered:

- The installation must last for about two years, so baked or welded gages may be required.
- Gage factor may be an important factor if EMI noise levels are high.
- Temperature changes can be extreme. On at-grade track they may be as high as 60-80° F on a daily cycle and over 140° F annually.
- Gage length should be 0.25 inch or less around bolt holes and in the rail fillets to minimize the averaging of strain gradients. (Frequency response is not a limitation for this application, i.e., a 0.50 inch gage is good to 20 kHz.)
- All gages will be uniaxial because the principle stress directions are known from previous research [3-1].

3.2.4.2 Tie Plate Load Cells

The loads transmitted from the rail to the ties adjacent to the joint are important parameters for documenting joint performance. A tie plate load cell capable of measuring vertical and lateral forces at the rail base as well as the net rollover moment on the rail is desirable. As shown in Table 3-6, full scale ranges should be on the order of 20 kips for vertical and lateral loads and 100 (10^3) in.-lb for rollover moment. Sensitivities will depend on the

specific design, but a minimum of 1.0 mV/V for full scale output should be a design goal. If the final design requires that the load cell remain in the track structure throughout the entire program, all components of the load cell must be capable of withstanding this fatigue environment. Accuracy should be better than 5 percent (static nonlinearity and hysteresis) on each axis and cross talk should also be below 5 percent. Frequency response should be documented to at least 100 Hz with no more than + 1dB and - 3 dB variation. Stiffness requirements will depend on the particular track structure to be tested, but track stiffness measurement should be used to verify that any changes in stiffness from the standard fastener/tie plate system have a negligible effect on the overall track stiffness, see Section 4.1.1.

A minimum of two tie plate load cells will be required, one at each end of the rail joint. At present, there are no "off-the-shelf" devices that satisfy all of these requirements. However, there is sufficient experience to indicate that once the particular track structures is selected, a tie plate load cell can be designed for this application.

3.2.4.3 Deflection Measurements

The requirements for deflection measurements include both small and large displacements (as little as 0.250 full scale for the longitudinal motion and more than 1.00 inch for absolute vertical motion). Data reported [3-8] for rail deflection indicates frequency response should be on the order of 100 Hz, and high resolution with low hysteresis is needed so that small deflections associated with a new rail joint can be measured with the same transducers (but with increased gain) that will be used to measure the response of a loose joint.

The transducer should be sufficiently rugged to operate when attached directly to the rail where it will be subjected to high shock levels from joint impacts and flat wheels (accelerations on the order of 500 g's peak have been measured in this environment). Some isolation may be required to protect the transducer if the shock environment is excessive. The results of a detailed evaluation of delfection transducers for meeting these requirements are given in Section 4.3.

3.2.4.4 Bolt Force

Measurement of the clamping force provided by the joint bolts can be accomplished with commercially available transducers designed for this purpose. Standard capacity for a one-inch bolt is 80,000 lb. Care must be taken to insure reasonable long-term accuracy of this measurement because the zero-load reference cannot be reestablished without affecting the test conditions (unloading and then reloading the bolts). Under full preload, little or no dynamic response from the bolt force sensors is expected. However, as the joint loosens the fluctuations in bolt load will be a key indicator of joint condition. Transducers suitable for measuring bolt force are discussed in Section 4.5.

3.2.4.5 Vehicle Position and Speed

The requirements for measuring speed and position in the vicinity of the rail joint are identical to those discussed previously in Section 3.1.4.5.

3.2.4.6 Instrumented Wheel Set

A wheel set which is instrumented to measure vertical and lateral wheel rail forces is an important source of data for this program, because the impact force at the rail joint is a very direct measure of joint condition. Accurate measurement of the impact forces requires a frequency response to 2 kHz based on data reported in [3-8]. Wheel/rail impact forces need to be correlated directly with track response measurements, and this requires a continuous measurement of forces. The wheel set might also be used to identify significant changes in the condition of the rail joint in order to schedule subsequent test sessions instead of using a fixed time interval.

3.2.4.7 Joint Impact Noise

The measurement of the impact noise associated with a wheel impacting a rail joint can be used as an indication of joint condition. A sound level

meter with a DC output proportional to fast meter response up to 120 dB SPL would be suitable for this application. Because this measurement is to be used only as an indication of joint condition, the microphone may be located sufficiently close to the rail joint to maximize its response to the joint impact over that of other noise sources.

3.2.4.8 Track Description Measurements

It will also be necessary to make several additional measurements to fully describe the performance of the test joint relative to the adjacent track and to verify that the degradation mode of the test joint is typical of other joints in that track section. These measurements would be made at the test joint once during each of the periodic track measurement sessions. The first three measurements should also be made at another joint at least three rail lengths from the test joint to serve as a base measurement for comparison. The recommended measurements are:

- Vertical profile of both rails for a distance of one rail length on either side of the test joint. These measurements can be made with a surveyor's transit and targets attached to the rail above each tie. This measurement should be made for unloaded track and then repeated with a stationary transit car having known wheel loads. Incremental positioning of the axles within the joint region will show local variations in track stiffness and settlement, which is an important part of joint degradation.
- A detailed measurement of the vertical profile at the rail end region of the test joint. This measurement can be made using a dial indicator attached to a beam which is clamped to the rail and spans the test joint. The beam should be at least 3 ft. long. These data would show rail end batter and other deformations of the rail head in the vicinity of the joint.
- Track profile, alignment, gage and cross level should be measured for several rail lengths on either side of the test joint, preferably using a track measurement car at the normal operating speed for the test site. Deterioration of track geometry near the joint

increases wheel/rail forces and accelerates joint degradation.

- The length of each rail joint bolt should be measured. This can be done using vernier calipers if the bolt ends have been machined to smooth, parallel surfaces prior to installation. Identations should be made for the machined surfaces to protect them from hammer blows.
- The nuts (or other fasteners) on the rail joint bolts should be indexed so that any relative rotation or local yielding of the threads can be determined by visual inspection or measurement. The measurement of wear caused by washers gouging the nut is also needed because this may be a critical factor for maintaining bolt preload.
- The total thickness of the installed joint (rail and joint bars) should be measured at several locations (premachining required) with vernier calipers to detect wear of the contact surfaces.
- The rail end gap, rail temperature, and ambient temperature should be monitored hourly during the test session.

3.2.5 Data Analysis Recommendations

Several of the parameters recommended for measuring joint performance, such as tie plate loads and wheel/rail forces, were also recommended for rail fastener measurements. Therefore, much of the background discussion on data analysis in Section 3.1.5 is also applicable and will not be repeated here.

Table 3-7 summarizes recommendations of data analysis procedures to provide data for the objectives given in Section 3.2.3. The reasons for selecting these particular data analysis methods are discussed in the following sections. It is realized, however, that the planning of any research program of this type should provide sufficient flexibility to modify the data analysis procedures based on the results from the initial measurement session.

3.2.5.1 Time History

Recordings of the time history (TH) of each measurement parameter are the most basic data that will be obtained from this program. These records will be invaluable for verifying the validity of the data and for demonstrating the

TABLE 3-7. SUMMARY OF DATA ANALYSIS RECOMMENDATIONS FOR BOLTED JOINT EVALUATION

Measurement Parameter	Joint Degradation	Analysis Models	Laboratory Test	Joint Design
Tie plate loads	PAPD, FS	TH, PSD, PAPD	TH, FS, PAPD	PAPD
Relative displacements between rails	APD	TH, APD	TH	APD
Absolute rail displacement	APD	TH, PSD, APD	TH, APD	---
Rail bolt force	TH, APD	TH, APD	---	TH, APD
Bolt hole strain	FS, PAPD	TH, PSD	TH, FS	FS, PAPD
Rail web, head, and foot strain	FS, PAPD	TH	TH, FS	FS, PAPD
Joint bar longitudinal strain	APD	TH, APD	TH	APD
Relative Displacement rail head/ joint bar	APD	TH, APD	TH	APD
Wheel/rail force (instrumented wheel)	TH, PAPD	TH, PSD	TH	TH, PAPD
Joint Noise	TH[a]	---	---	---

Nomenclature

APD - Amplitude probability distribution analysis (mean value and standard deviation included)

PAPD - Peak amplitude probability distribution analysis (mean value and standard deviation included)

FS - Fatigue statistics

TH - Time history

PSD - Power spectral density

(a) Time history of fast (impulse) response sound pressure level.

actual performance of the joint under traffic. The time history data will be particularly useful for the development and verification of analytical models where the time sequence for loads, stresses and displacements is a key factor. Selected time histories may also provide the best description of joint loads to use as input data to simulate field conditions in the laboratory.

3.2.5.2 Amplitude Statistics

As discussed previously in Section 3.1.5.2, the statistics governing the occurrence of peak loads and displacements under traffic are pertinent to many track failure modes. The peak amplitude probability distribution (PAPD) or its derivative, the amplitude probability density function, and the mean value and standard deviation are key data analysis procedures recommended for joint evaluation. As shown in Table 3-7, the PAPD analysis is recommended for measurements such as tie plate loads, rail strain, and wheel/rail forces which undergo large variations for each wheel pass. Measurement parameters such as the relative displacements between rails, bolt tension, and thermal strains will have a relatively small variation superimposed on a constant mean value, at least until the joint begins to loosen. The change in the mean values of many of these parameters should provide a good description of joint deterioration.

Figures 3-8 and 3-9 show an example format for presenting probability distribution and probability density data to demonstrate how this format could be used to demonstrate joint condition. This hypothetical example is for vertical tie plate loads at a tie adjacent to the joint. The loads carried by the tie would increase as the joint bars loosen and the total wheel load is distributed on fewer ties.

Appendix A describes the effect of data sample size on the estimation accuracy and confidence limits for amplitude statistics.

3.2.5.3 Fatigue Statistics

Fatigue statistics describe strain data and load data in a manner which can be used to quantify fatigue damage potential and to design laboratory tests which provide accurate service life predictions. While there is no universally

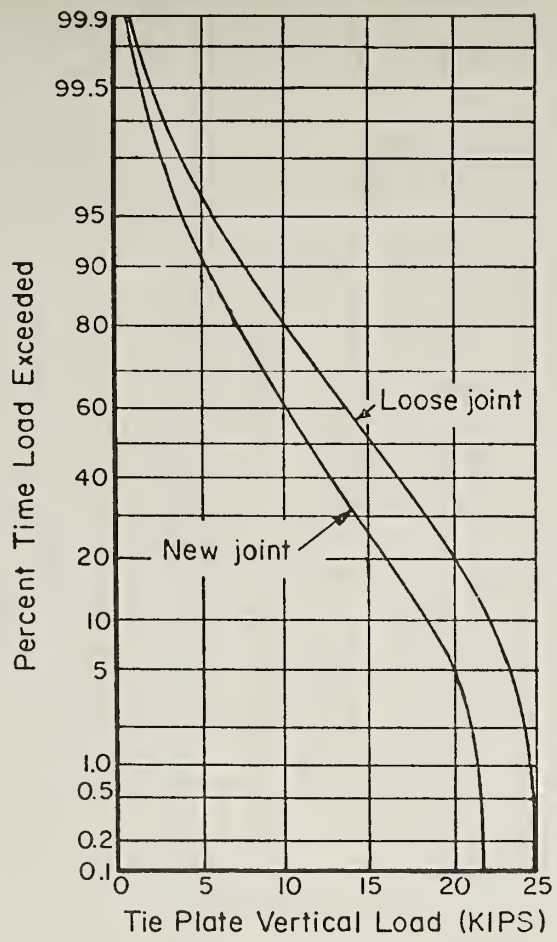

FIGURE 3-8. SAMPLE FORMAT FOR AMPLITUDE PROBABILITY DISTRIBUTION OF PEAK VERTICAL TIE PLATE LOADS

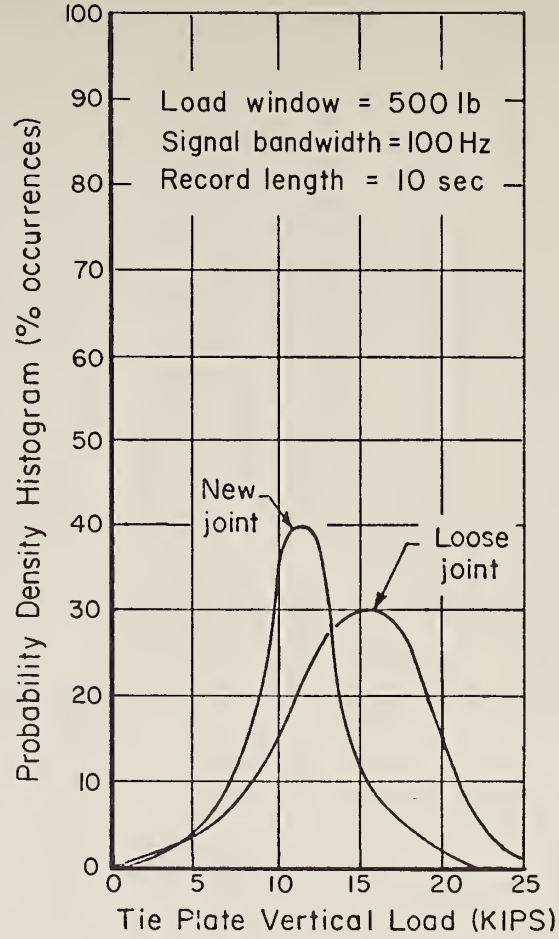

FIGURE 3-9. SAMPLE FORMAT FOR AMPLITUDE PROBABILITY DENSITY PEAK VERTICAL TIE PLATE LOADS

accepted method for obtaining fatigue data, all of the better methods are based on describing a fluctuating signal by determining a mean value and a range for each cyclic variation. The rain-flow method of analysis is recommended for this program because it is a relatively comprehensive cycle counting procedure, including sequencing. The results, which appear as a sequenced list of mean value and range for each cycle, can then be processed to provide a load spectrum based on a selected cumulative damage theory.

Fatigue statistics of rail strain at critical locations like the bolt holes and rail head fillets are needed to explain the initiation of fatigue cracks and to develop design procedures and laboratory tests which can be used to improve joint performance. Techniques for utilizing the fatigue statistics for analysis and life tests are discussed in Appendix B..

3.2.5.4 Power Spectral Density

A power spectral density analysis identifies the frequency content of a selected signal. These data will be most useful for developing and evaluating analytical models of joint behavior where the dynamic response from wheel impact is significant. The standard deviation can be obtained from the integral of the power spectral density, but this can be obtained more directly from amplitude statistics. The power spectrum will be most useful for identifying cause and effect relations by comparing the PSD's for wheel forces and rail response.

3.2.6 Data Processing

The data analysis techniques which are recommended for specified data parameters were discussed in the previous section. However, the overall operation of the measurement program must be considered in formulating data processing requirements.

The rationale for selecting a 24-hour measurement period during a normal work week as a sample period for transit operations was discussed in Section 3.1.6 for rail fasteners. Joint evaluation will require repeated measurement sessions at intervals of 2 to 3 months to document joint degradation. The provision for subdividing the 24-hour data into selected time intervals, temperature

ranges, and vehicle speeds should be included in a joint measurement program to provide the same flexibility recommended for the fastener measurements. Of course, the variation between data from different measurement sessions is of greatest importance for evaluating the joint measurements relative to joint degradation.

The data processing requirements which are common to rail fasteners and rail joint measurements are discussed in Appendix C. The analog to digital (A/D) conversion requirements for the joint data are relatively straightforward except for the large number of channels (about 50) and a considerable difference in the frequency bandwidth for the different channels. The highest frequencies of interest will be determined by the dynamic response of the rail end and the wheel/rail forces excited by wheel impact. Available data indicate that a bandwidth from DC to 2 kHz will be needed to accurately record the output signals from the bolt hole strain gages. This requires a 10 kHz sampling rate per channel and may limit the A/D conversion process to a maximum of 5 to 10 channels simultaneously rather than the usual 16 channel capacity. This limit is imposed by the minicomputer operation, which is frequently more restricted than its maximum capacity for A/D conversion.

It should be possible to process many of the other data channels, such as the rail displacements and tie plate loads, at a digitizing rate of 500 Hz to provide a bandwidth from DC to 100 Hz. The record for a complete train pass can be used for analysis of these channels. However, the data records obtained at a 10 kHz sampling rate will be limited to a time period for a single truck pass to keep the total number of data points to a reasonable number of 2000 to 4000.

3.2.7 Test Site Selection

The choice of a test site includes selecting the bolted joint configuration, the type of track construction, the operating property, and the desired traffic conditions governed by vehicle size, traffic density, and vehicle speeds through the test location. It is also necessary to choose between a curve or tangent track location. Once these fundamental decisions have been made, the selection of the particular location of the measurements should include an evaluation of the roadbed condition and the practical aspects of conducting a

track measurement program under traffic. Criteria for making these decisions are discussed in the following sections.

3.2.7.1 Track Construction

Track construction for urban rail track includes wood or concrete ties on ballast for at-grade and some subway track and a variety of concrete invert construction for subways, including imbedded wood stub ties and direct fixation. Any of these constructions should yield similar results with regard to the mechanisms for joint degration, although the rate at which joints deteriorate may differ considerably for different track construction. However, the at-grade tie and ballast track is recommended for an initial evaluation program to include the interaction effects of the roadbed. Furthermore, the role of the bolted rail joint in alleviating thermal stresses is more important in at-grade track which typically has lower lateral resistance and greater temperature variations than normally occur in subways. And community objections to noise and vibration from transit vehicles operating on bolted rail probably occur more frequently for at-grade track than for subway track. Because bolted rail is used more frequently with wood than concrete ties, data from joints on wood tie and ballast construction would be applicable for a greater percentage of urban track.

3.2.7.2 Traffic Conditions

The life of a bolted rail joint will depend on the number of cars, axle loads, and train speeds, in addition to the expansion and contraction cycles from thermal loads. The joint loading will also be influenced by the unsprung mass and the suspension system characteristics of the particular vehicle in service. A location having a relatively high traffic density of one vehicle type (preferably a recent vintage) operating in a single direction (2-track line) near the maximum design speed for the system should be selected to reduce some of the variables. The selection of a maximum speed zone will provide data for the most severe joint impact loads, and the effect of vehicle speed can be determined with the cooperation of the operating property by operating a limited number of trains at reduced speed.

3.2.7.3 Site Location

It is recommended that the track section selected for a rail joint measurement program be either relatively new or recently maintained with the joints, roadbed, and rail in good condition. In this way the joint performance can be evaluated over a full cycle from good to poor condition. It may be desirable, for practical considerations, to actually instrument new rail of identical size to obtain the full degradation cycle. A "typical roadbed" location should be selected based on a review of track impedance measurements, track modulus measurements, and/or a track geometry measurement car. A location on tangent track is preferable for an initial program. Lateral forces on curves are not known to be a major cause of joint degradation in transit track, even though railroad experience indicates the low rail on curves is a critical location. No data have been located on joint failures in transit track to indicate that a specific track location has the greatest number of joint failures.

Operational requirements will also have an important influence on site selection. Easy and safe accessibility of the site for personnel and equipment is a necessity. The location should also allow for traffic to be conveniently diverted to another track during installation and check out of the instrumentation. This is preferable to one where access is limited to early morning hours or Sundays. This would make it possible to remove the two rails common to the selected joint location so that an identical set of instrumented rails and rail joint hardware can be installed. This will require the cooperation of the operating property in providing a track maintenance crew and equipment to change the rails and replace the joints.

Protection of transducers and cabling from environmental factors will be an important part of the instrumentation design and fabrication tasks. Long-term survival of the strain gages as well as short-term operation of the other transducers will be affected by moisture, corrosives, rodents and vandals. Track locations where any of these factors are unusually prevalent should be avoided.

The operation of the instrumentation and data acquisition systems, small power tools and the test van or trailer will require 115 VAC power. Total power requirements depend on the final design, but a maximum of 5 KVA should be

adequate for normal operating conditions. Availability of this power is another consideration for site selection, but this should be a relatively easy requirement to satisfy.

It is anticipated that EMI noise caused by the high power return in rails and RFI noise from the arcing of the third rail contact and the traction motors on the cars may be a significant source of problems for the measurement system, particularly for strain gages mounted on the rails. The gages cannot be effectively shielded from the EMI because of their close contact with the rail. Reduction of the strength of the electromagnetic field can be achieved, however, by shunting or by-passing the current through a separate conductor around an electrically isolated track section which contains the instrumented rail. This would shift all or most of the return current from axles within the isolated section to the opposite rail. The return current from axles outside the isolated section would be shunted around the instrumented rail. It is not known whether this will be sufficient to resolve the problem, so verification of the magnitude of this problem is recommended before the test program is initiated.

To minimize the effect of the RFI, the test site should be selected so the instrumented joint and the data acquisition system can be located on the side of the track opposite the third rail and a sufficient distance from other potential noise sources such as electrical substations and high-power transmission lines. Electrical noise from the signaling system should not be a problem.

3.2.7.4 Operating Property

The most important criteria for selecting a particular transit property for this measurement program are the interest and cooperation that can be expected from the property staff who will be helping with the program. A property where the degradation of bolted joints is a significant problem and where suggestions about joint maintenance procedures would be welcomed and tried would be an ideal selection. It is also desirable that the track location selected be recognized as typical for the U.S. rail transit industry so that the results would have broader application.

3.2.8 Instrumentation Installation Requirements

Monitoring the degradation of a bolted rail joint will require a long term effort with short data collecting sessions spaced a few months apart. The instrumentation that is permanently installed will have to remain operable for two or more years in a severe environment. This includes the strain gage installations and possibly the tie plate load cells. The bolt force sensors will also remain, and may be susceptable to wear and fatigue when the joint bolts become loose. Protection from weathering, contamination, rodents, vandals, dragging equipment, and unsuspecting maintenance crews will all have to be included in the final design and installation of the equipment. Transducers and cabling that are fixed directly to the rail may experience shock pulses up to several hundred g's when the joint becomes loose. Unless adjacent rail fasteners include resilient pads, high accelerations will aso be transmitted to the tie plate load cells and transducers mounted on the cross ties. This severe vibration environment demands that all equipment be assembled with staking compounds and locking fasteners.

4.0 EVALUATION OF AVAILABLE INSTRUMENTATION AND RECOMMENDATIONS FOR INSTRUMENTATION DEVELOPMENT

This section of the report includes an evaluation of available track instrumentation based on the measurement requirements given in Section 3.0 for determining the performance of rail fasteners and bolted rail joints. Instrumentation for measuring tie plate loads, wheel/rail forces, rail deflections, rail stresses, and bolt forces and for detecting wheels have been reviewed. Functional specifications for improved instrumentation have been developed when the performance of available instrumentation was inadequate. The instrumentation for both rail fasteners and rail joints are discussed in sections according to the measurement parameter because many of the requirements are quite similar. Significant differences pertinent to these track components are identified when necessary.

4.1 TIE PLATE LOADS

Tie plate loads are among the most important parameters to be measured for both rail joint and rail fastener research. Vertical, lateral, and longitudinal forces and the overturning moment at the rail base are all needed to describe the loading environment at the interface between the rail and the ties or concrete invert. Vertical load is a major factor in nearly all track research. Lateral load is primarily important for track measurements on curves, but high lateral loads can also be caused by track alinement irregularities or truck hunting on tangent track. Longitudinal loads show the restraint provided at the tie plate against thermal and tractional forces. The rail rollover moment indicates the net moment at the rail base caused by lateral forces at the rail head and the vertical load offset due to the position of the wheel/rail contact patch.

The two primary types of instrumentation used to measure these parameters are: tie plate load cells and strain gaged rail. These are discussed separetly in the following sections.

4.1.1 Tie Plate Load Cells

Tie plate load cells represent one of the major sources of data for track measurements. Several designs have been developed which reflect various levels of sophistication and complexity. Load cell complexity is usually related directly to the number of axes to be measured simultaneously. A uniaxial device can be relatively simple, even to the point of modifying standard track components to create the load cell. As shown in Table 4-1, load cell complexity will be reflected in the cost of production. At present, only two different load cells fot tie ballast track are known that measure loads in two axes. The load cell developed for the Office for Research and Experiments (ORE) of the International Union of Railways and subsequently modified by the Canadian National Railroad (CN) measured vertical and lateral loads simultaneously. The load cell developed by Battelle's Columbus Laboratories (BCL) for the Track Train Dynamics (TTD) program measures vertical load and rail rollover moment simultaneously. However, rollover moment is really an extension of the vertical load measuring capability, and therefore it is less difficult to measure than isolating two orthogonal translational axes.

Performance of any tie plate load cell must be considered both from the standpoint of its accuracy as a transducer and for its ability to duplicate the geometry and stiffness of the track components it replaces. Factors which describe the accuracy for a tie plate load cell are the same as those for any other transducer. These include nonlinearity and hysteresis, crossaxis sensitivities or "cross talk", frequency response, and temperature coefficients for zero and sensitivity. Accuracy requirements depend on the objectives for the particular measurement program. On the other hand, the requirements for duplicating tie plate geometry and stiffness depend on the particular track construction for which the load cell is designed. The geometry requirements referred to here are the dimensional constraints for that portion of the load cell which must fit both the rail base and the top of the tie or invert and maintain the original spacings and clearances. It must also fit inside a clearance envelope to avoid interference with rolling stock.

The stiffness requirements will also be a function of track construction. Ideally, the load cell should duplicate the stiffness of the components which it replaces; however, this will seldom be possible. Therefore, any change

TABLE 4-1. SUMMARY OF TIE PLATE LOAD CELL PERFORMANCE

Load Cell	Parameter	Maximum Load	Sensitivity	Combined Inaccuracies (Approximate)	Estimated Cost to Replicate
ORE (Dev. by British Rail)	Vertical tie plate load	33 kips	0.6 mv/v/F.S.	± 5 percent	-
	Lateral tie plate load	22 kips	2.6 mv/v/F.S.	± 5 percent	-
Canadian National (CN)	Vertical tie plate load	50 kips	1.0 mv/v/F.S.	± 4 percent	-
	Lateral tie plate load	30 kips (calibrated to 20 kips)	2.0 mv/v/20 kips	± 4 percent	$10K
BCL-TTD	Vertical tie plate load	75 kips (calibrated to 60 kips)	4.0 mv/v/60 kips	± 5 percent	$2.5K
	Overturning moment	125×10^3 in-lb	4.0 mv/v/F.S.	± 7 percent	
BCL-FRA	Vertical tie plate load	40 kips (calibrated to 16 kips)	0.6 mv/v/F.S.	± 5 percent	$2K

in stiffness must be shown to have a negligible effect on the overall support characteristics of the track.

The change in tie plate load caused by replacing standard track components with a load cell of different stiffness can be estimated. When the stiffness at one tie is changed, the effect on tie plate load can be evaluated using the relation

$$q_o = K_t \, y_{max}, \tag{4-1}$$

where K_t is the effective stiffness of one tie and fastener at the rail base, q_o is the rail seat load, and y_{max} is the maximum rail deflection for a wheel load on the rail. The wheel load on the rail is shared by several adjacent ties, so changing the support stiffness at only one tie has a relatively small effect on the rail displacement. Therefore, the resulting change in tie plate load Δq_o caused by a change in tie stiffness ΔK_t can be estimated conservatively from Equation (4-1) by assuming that y_{max} remains constant so that

$$\frac{\Delta q_o}{q_o} \approx \frac{\Delta K_t}{K_t} \quad . \tag{4-2}$$

When a stiff load cell having stiffness K_c is installed, the resulting change in stiffness ΔK_t is given approximately by

$$\frac{\Delta K_t}{K_t} \approx \frac{K_t}{K_c} \quad . \tag{4-3}$$

Therefore, $K_c \geq 20 \, K_t$ will insure that the error in tie plate load due to the stiffness change will be no more than 5%. A nominal effective stiffness for relatively stiff wood tie and ballast track is $K_t = 40{,}000$ lb/in [4-1], so K_c should be greater than 800,000 lb/in. Stiffnesses considerably greater than this can be obtained from a well designed load cell.

For concrete invert constructed on bedrock, the flexible components of the fastener govern track stiffness. The stiffness of some resilient fasteners can be as high as 600,000 lb/in [4-2]. Therefore, the stiffness of a load cell tie plate should be greater than 12×10^6 lb/in. This can be obtained under ideal conditions, but it may be easier to increase the stiffness of the resilient pad so that the combined stiffness of the load cell and flexible pad is comparable to the original fastener.

A more critical factor which becomes obvious when a tie plate load cell is applied in the field is the initial slack or "free play" found in unloaded or lightly loaded track. The stiffness K_t is actually the stiffer portion of a linear approximation for the general non-linear track force deflection curve, see Figure 4-1. The initial portion of the curve is caused by poor mechanical fit between the rail, the tie plate, and the tie. (Other factors such as tie center binding and hung ties will also affect this, but are not of importance to this discussion.) The poor fit is due to warpage produced by the hot rolling process used to manufacture rail and tie plates, and also the natural tendencies for wood ties to twist and warp with age. When these interfaces are stacked together, they produce a soft spring which bottoms out quickly after initial preloading. In addition, occasional "proud ties" along the track will introduce a small amount of free play which varies from one tie to the next.

These factors cannot be realistically duplicated by the load cell. Therefore, inherently more slack and a somewhat stiffer spring will be introduced by replacing a tie plate with an accurately machined load cell. As a result, there will always be some change in tie plate load when the standard unit is replaced with an instrumented unit. Whether or not this change is significant to the program depends on the particular program requirements and on the type of track construction. It can be safely assumed for wood tie and ballast track where a close representation of actual tie plate load is required, instrumented tie plates cannot be substituted without some dimensional adjustment.

There are three approaches which can be used to achieve tie plate loads approaching that of the undisturbed tie:

(1) Leave the instrumented tie plate unshimmed (a condition usually resulting in lower loads than normal) and let the track settle around the instrumented tie until the loads readjust themselves.

(2) Shim the tie plate "tight" (producing a "proud" tie) and let the instrumented tie settle until it approaches a stable reading.

(3) Shim the tie plate to (a) duplicate rail deflections under a known load prior to tie plate replacement, or (b) produce a desired output with a light load which is sufficient to remove slack conditions.

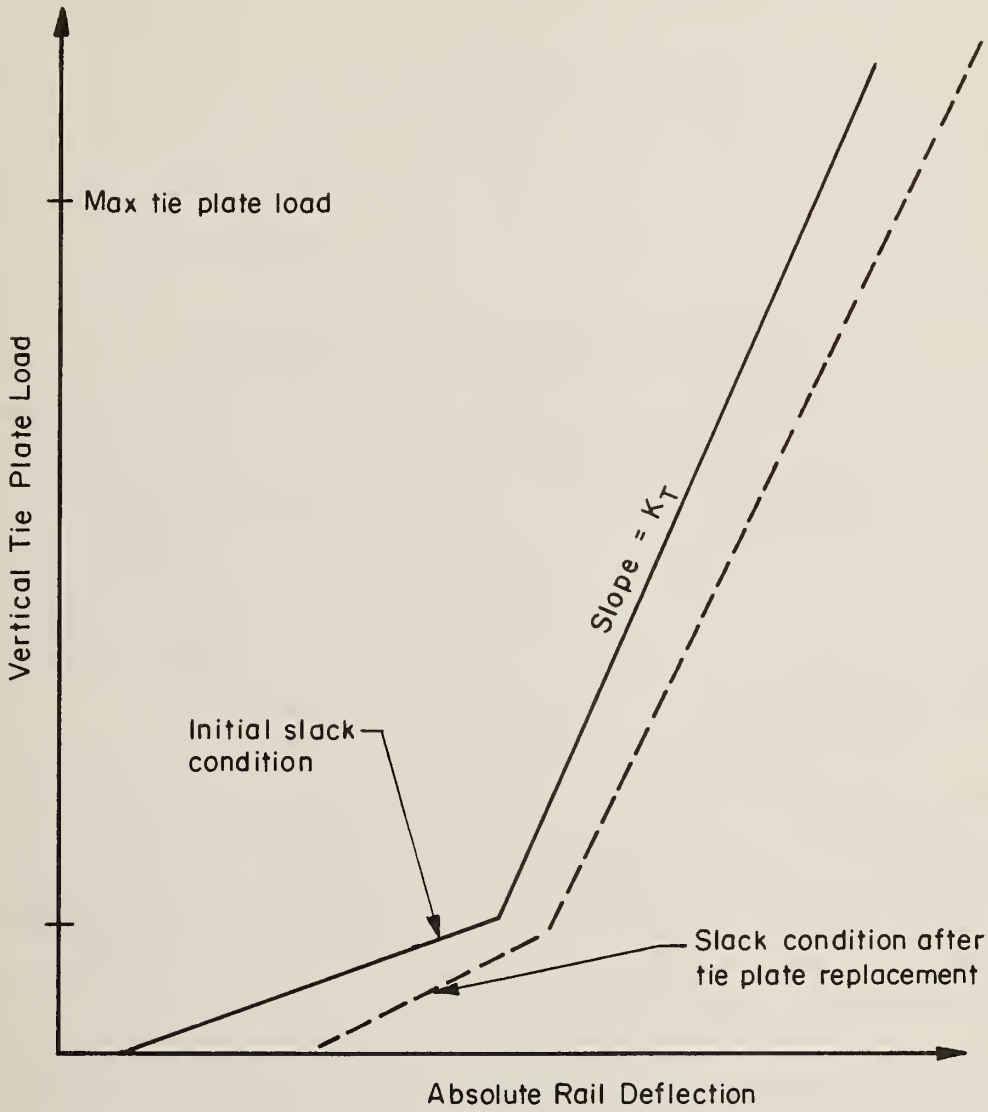

FIGURE 4-1. TYPICAL TRACK STIFFNESS CHARACTERISTICS

Figure 4-2 illustrates the effects of these three approaches. For a long-term program where maximum loads are of interest, the tight condition (2) would probably be best. If a short term program were planned with "representative" tie plate loads, then the adjusted tie plate (3) may be best. The unshimmed tie plate (1) may require a considerable time period to adjust, so it should be considered only when several consecutive tie plates are replaced, or when track construction is precise enough that dimensional tolerances are small compared to the total rail deflection under load; a rule of thumb would be 10 percent of total deflection.

The technique of adjusting the tie plate fit by measuring deflections requires the installation of an absolute vertical displacement transducer which would normally be included in most test programs. An initial deflection measurement using a heavy, known load prior to the tie plate replacement will provide the reference for subsequent deflection measurements. By shimming the tie plate the same amount as the indicated change in peak displacement, a first approximation can be made. This should be verified after shimming and subsequent changes in peak deflections should be monitored after traffic has settled the installation.

The technique of adjusting for a known light load is equivalent to setting the zero for a "linear" system. Two assumptions must be made to apply this technique: (1) an approximate percentage of wheel load supported by an individual tie, and (2) a minimum wheel load sufficient to remove the slack in the track structure. Using calculated or measured track stiffness values and tie spacing should yield an adequate indication of percentage of wheel load supported by a single tie, and wheel load may be selected from field experience. As an example, assume the tie plate load desired is 50 percent of the wheel load, and assume a 1000-lb wheel load is sufficient to preload the structure. Then the tie plate can be shimmed until approximately 500 lb is read at the tie plate. A $\pm$ 50 percent error ($\pm$ 250-lb) between the measured and "ideal" load would represent less than a 4 percent error for a reasonable tie plate load of 7500 lbs corresponding to a normal wheel load of 15,000 lb. This assumes that the instrumented tie plate does not affect K_t appreciably.

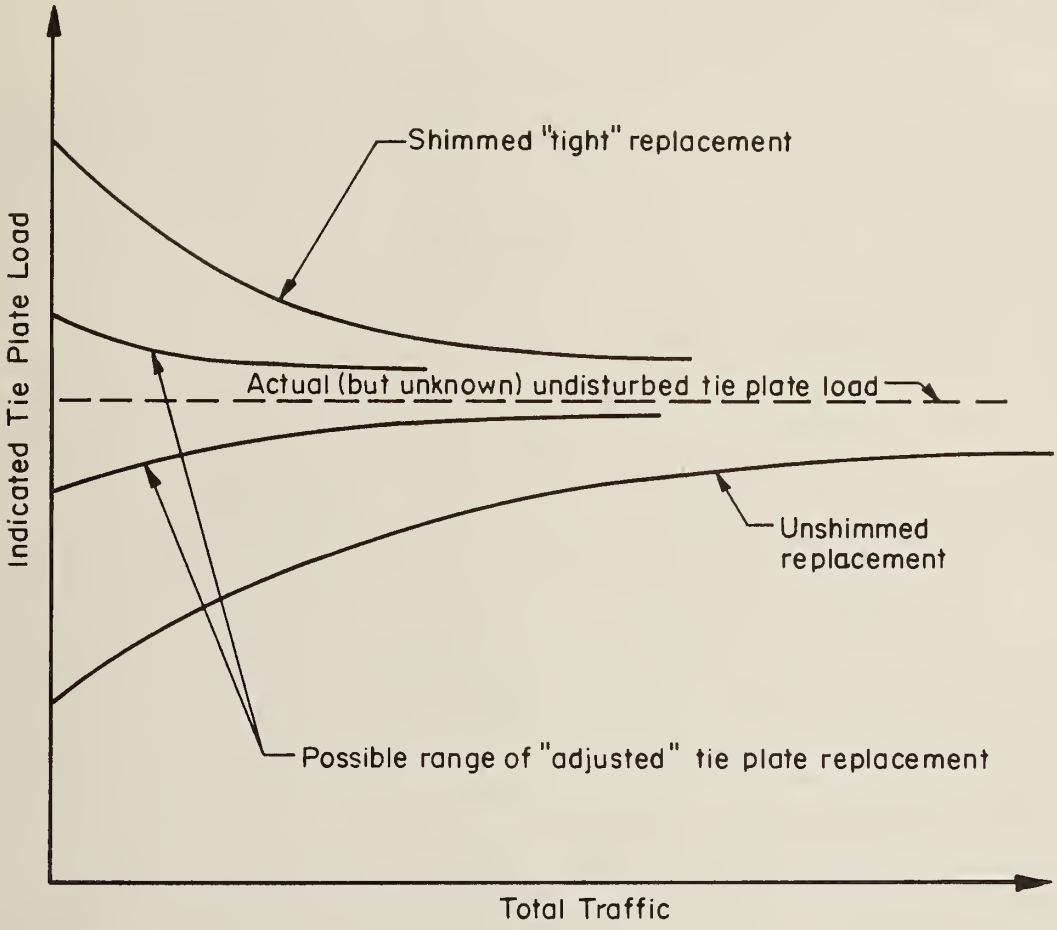

FIGURE 4-2. EFFECT OF SHIMMING TECHNIQUES ON INDICATED TIE PLATE LOADS

4.1.1.1 ORE/CN Tie Plate Load Cell

The load cell referred to as the ORE/CN tie plate load cell was developed originally by British Rail for the ORE [4-3] and later adapted by the Canadian National Railroad for use in track carrying heavy freight traffic [4-4]. As illustrated in Figure 4-3, the load cell consists of five main components: two cross beams which serve as rail seats transmit rail seat loads through two instrumented load columns to the yokes; the two yokes are used to attach the cross beams to the saddle; and the saddle is fastened to the tie and transmits the rail loads onto the tie. The load columns are integral to the four studs which connect the cross beams to the yokes. Each column is strain gaged and then wired into overall vertical and lateral bridge circuits. The individual column sensitivities are adjusted to eliminate the effect of the load application point. Figure 4-4 illustrates the gage layout and the circuit diagram used by BR [4-3].

Installation of the load cell in the track structure is straightforward and does not affect tie seating. Figure 4-5 illustrates a typical installation and shows the amount of ballast removal necessary in the crib area to provide clearance for the cross beams. Rail retention is different than conventional cut spike/tie plate construction in that the rail base is rigidly clamped to the cross beams of the load cell. This will certainly have some effect on rail torsional stiffness and will also tend to produce a "hanging tie". The CN researchers have experienced tie loading difficulties from track free play as discussed in the previous section, and this appears to be the only major difficulty they have yet to resolve. A secondary problem has been the pooling and subsequent freezing of run-off water trapped in the crib.

The CN tie plate is calibrated using a conventional hydraulically actuated testing machine to apply vertical load, and a small hydraulic jack is used to apply lateral loads. Vertical load is applied at the top of a short rail section and the load cell is attached to a steel "tie" mounted to the lower platen of the testing machine. Vertical loads are measured in 5,000 lb increments up to 50,000 lb maximum, and simultaneous readings are made on the output of the lateral bridge to determine cross talk. Vertical load is then set at 20,000 lb while lateral loads are applied. Changes in vertical load are recorded during the lateral calibration. Variations in output due to cross talk amount to about

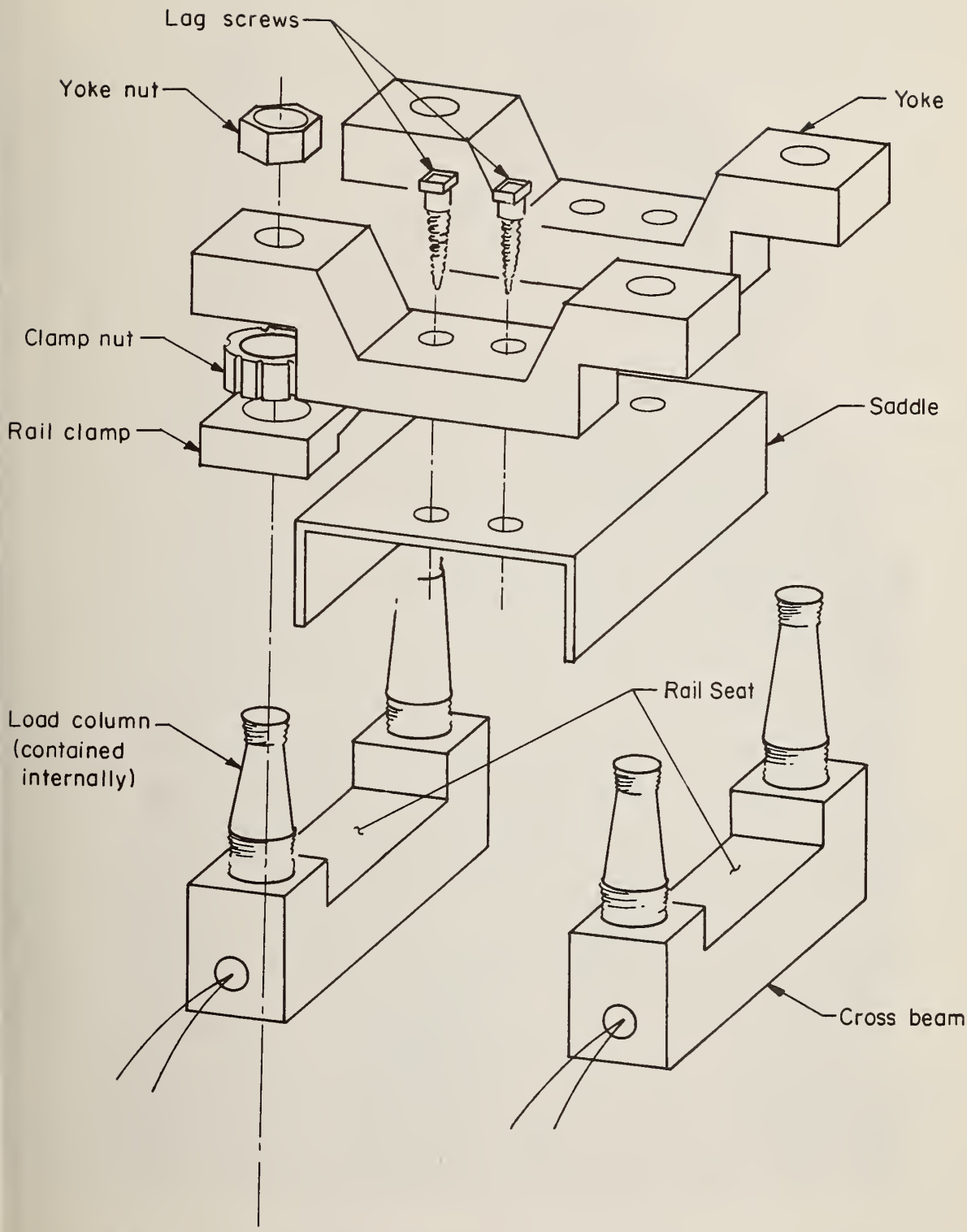

FIGURE 4-3. EXPLODED VIEW OF ORE/CN TIE PLATE

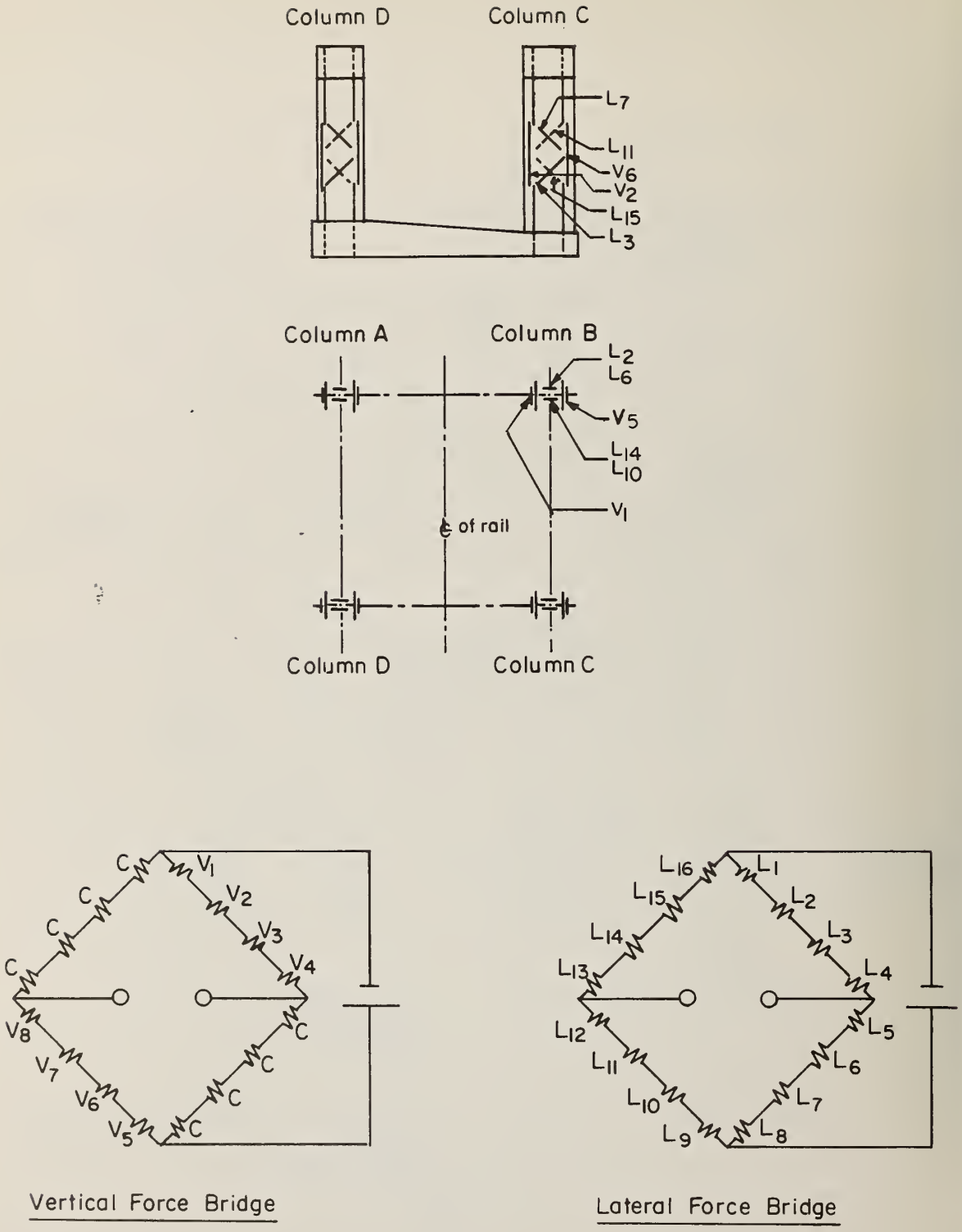

FIGURE 4-4. VERTICAL AND LATERAL CIRCUITS FOR ORE/CN TIE PLATE

FIGURE 4-5. CN TIE PLATE LOAD CELL AS INSTALLED

3 percent for each axis. Vertical sensitivity is approximately 1 mv/v/F.S. Excitation voltages were adjusted to provide output sensitivities of 1 volt per 5,000 lb at the output of the signal conditioning amplifier. Lateral sensitivity was approximately 2 mv/v for a calibrated 20,000 lb full scale. The excitation voltage is adjusted to provide approximately 1 volt for 2,000 lb of lateral load.

Vertical sensitivity of the ORE tie plate design is about one-third less for its full scale output, and it is designed for a lower full scale load of 33,000 lb. Its lateral range and sensitivity are approximately the same as the CN device. Cross talk is also comparable to the CN load cell. Table 4-1 summarizes the characteristics of these two tie plates and compares them with two other designs discussed in the following sections.

4.1.1.2 BCL-TTD Tie Plate Load Cells

As part of Task 13A of the AAR-FRA-RPI-TDA Track Train Dynamics (TTD) program, an instrumented tie plate was designed and fabricated by Battelle's Columbus Laboratories (BCL) to measure vertical loads and rail rollover moments. This tie plate shown in Figure 4-6 consists of three load cell buttons, each having a complete strain-gage bridge with a 25,000-lb capacity. Two of these buttons are on the field side and one is on the gage side of the rail base. The load cells are installed in a split plate of hardened 4340 steel. Vertical load is measured as the sum of all three load cells, while rollover moment at the rail base is measured as the sum of the outer two minus the inner. Outer rail flange retention is accomplished with a flexural member which minimizes the effect of side thrust on vertical output.

The tie plate was designed to replace a standard tie plate so that no change in spike pattern or other special preparations would be needed. An eight wire bridge network was used for each strain gage load cell circuit. This eliminates the reduced sensitivity and calibration error caused by the resistance of long cables used with conventional 4-wire circuits. The amplifiers for signal conditioning and summing of the load cell signals were located in a test trailer adjacent to the track.

The load buttons were commercial devices and provided about $\pm$ 5 percent static nonlinearity and hysteresis. These devices were installed into the

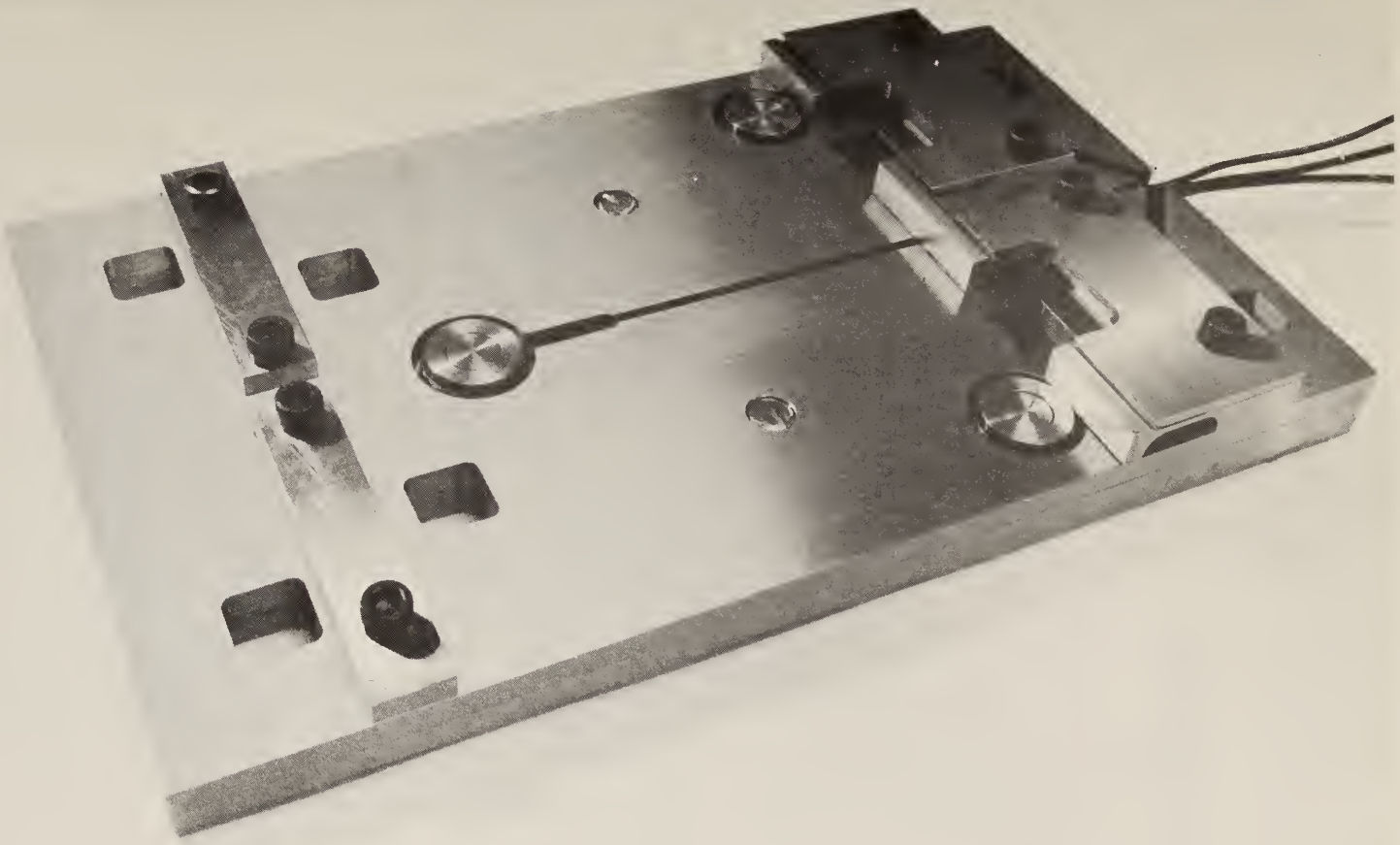

FIGURE 4-6. BCL-TTD TIE PLATE LOAD CELL

plates and then calibrated by standard techniques using a laboratory testing machine. The commercial specifications for temperature coefficients were assumed to be valid, and therefore these were not rechecked.

4.1.1.3 BCL-FRA Tie Plate Load Cell

The load cell shown in Figure 4-7 was developed for the Federal Railroad Administration (FRA) [4-5] by BCL for measuring vertical tie plate loads at Bowie, Maryland. This device was made from a standard hot rolled tie plate and used commercial load washers as the sensitive elements. Four load washers were used and the outputs from these single gage element transducers were summed together into a single bridge to give a total vertical load signal. Only vertical loads were measured and accuracies were determined by the performance of the load washers. The maximum load capability was, however, low enough that the individual washers were susceptible to over-stressing under extreme (wheel flat) conditions. This load cell design reflects a minimum cost of fabrication and is suitable for short term test programs where vertical loads are required. With minor changes, rollover moment could also be measured.

Although no mechanical failures occured during this program, high stress concentrations in the modified tie plate would presumably reduce its fatigue life substantially so that long term tests may not be practical. The particular load washers available when this tie plate was designed had low sensitivity, but more recent devices remedy that problem.

4.1.1.4 Kansas Test Track Tie Plate Load Cell

Although no published information was available, the Portland Cement Association has designed a load cell for the Kansas Test Track (KTT). This load cell is installed under selected rail fasteners on the concrete slab test section. A special pocket was cast in the concrete for the load cell, so it was not necessary to have the load cell fit the original fastener dimensions.

The KTT load cell measures vertical and lateral loads simultaneously. Figure 4-8 is an approximate sketch of the assembly based on a verbal description. The vertical output is obtained from strain gages measuring bending in the top

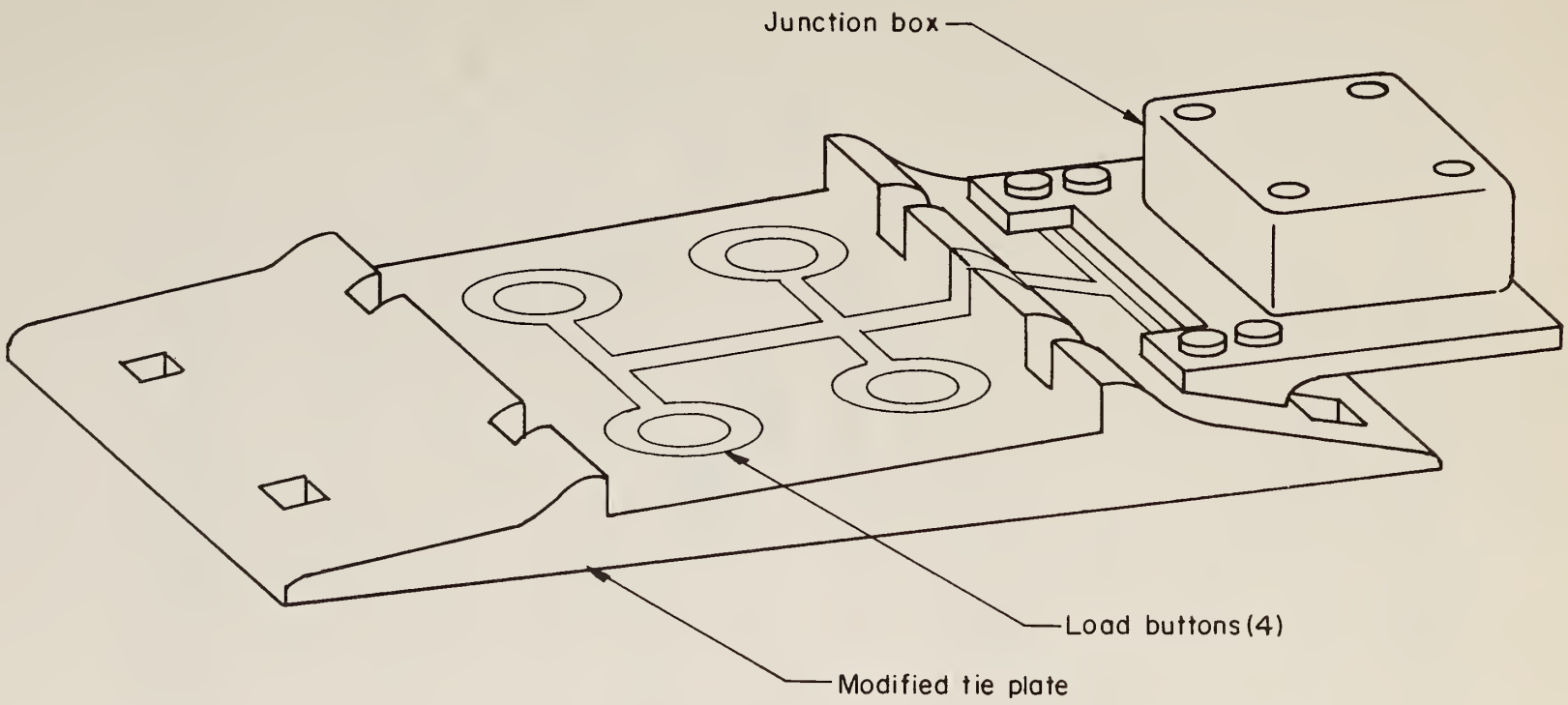

FIGURE 4-7. BCL-FRA TIE PLATE

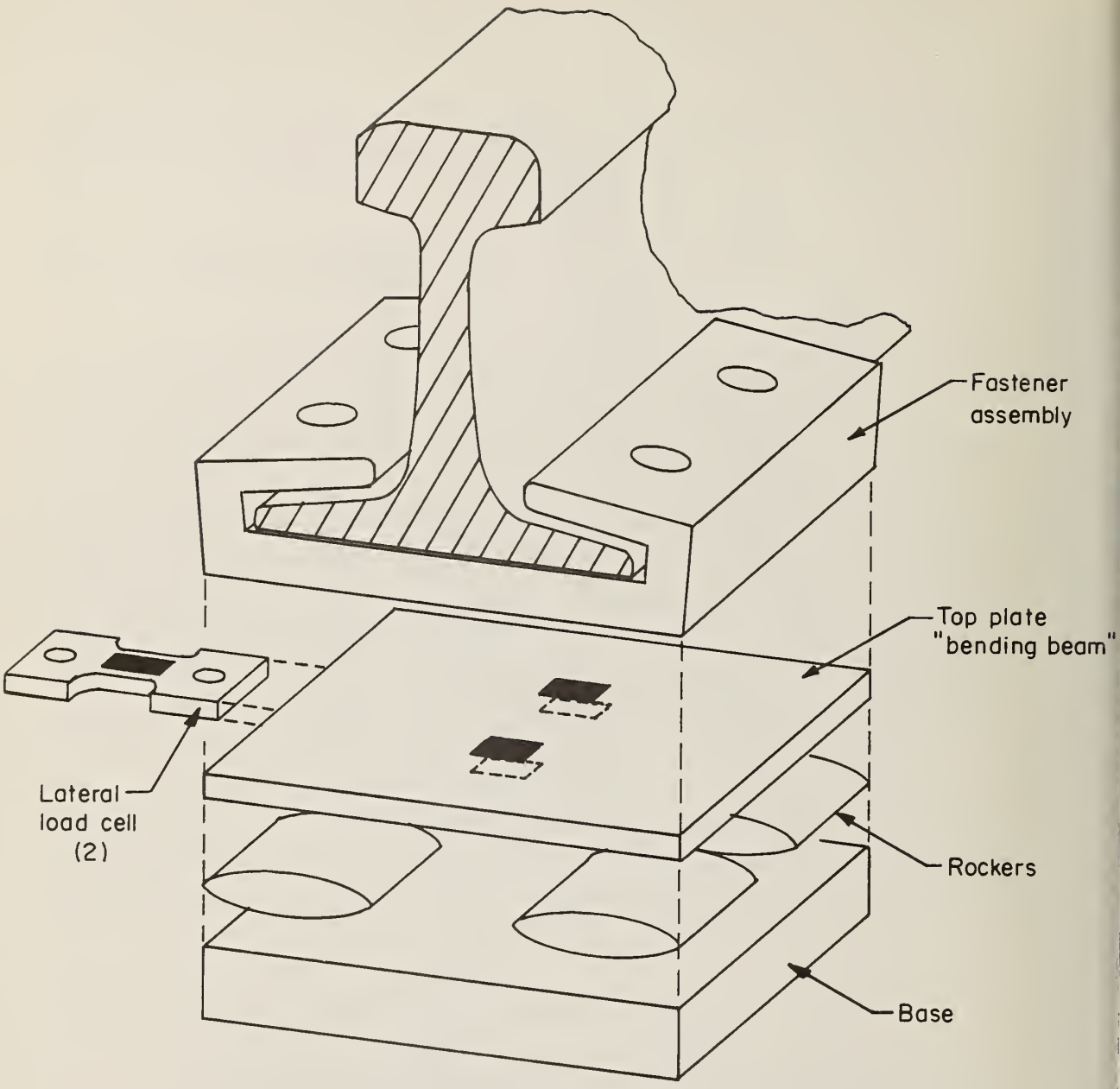

FIGURE 4-8. KANSAS TEST TRACK TIE PLATE LOAD CELL

plate, and this plate is supported on rockers to provide low lateral restraint. Two separate load cells are attached between the top plate and the base plate to measure lateral forces.

No information is available on load cell performance but some performance characteristics can be assumed. The bending of the top plate will be affected by the location, contact area, and distribution of the load and the rockers, so that the entire rail fastener must be included during calibration. The plate bending deflection needed for a sufficient output signal may significantly lower system stiffness, and reduce the frequency response of the load cell.

If actual performance is adequate, this load cell design represents a desirable minimum in complexity worthy of further exploitation. However, it does require the modification of the concrete support structure, which may not always be possible.

4.1.2 Strain Gaged Rail

Figure 4-9 shows a rail strain gage circuit designed specifically for measuring tie plate loads [4-6]. This circuit is designed to measure vertical shear forces at each end of a rail segment defined by the location of two sets of strain gage chevrons. As shown in Figure 4-9, the value of tie plate reaction $R = P - (V_1 + V_2)$ where P is the wheel load and V_1 and V_2 are the two shear forces measured. This would require that P is known at all times within the measured section, a requirement which cannot be conviently produced. Either slow, known wheel loads would have to be applied so that a fixed offset is subtracted or data transmitted directly off of an instrumented wheel set would have to be summed to obtain an accurate time history. If only peak tie plate loads are needed, a similar circuit can be mounted just outside the tie support zone where the circuit output will measure the wheel load itself. Time skew and the uncertainty of change in wheel load over the two regions would eliminate good time histories and introduce errors which could only be averaged out statistically. These factors would certainly restrict the useful applications of this gage circuit but the tie plate loads could be measured this way without removing any tie plates.

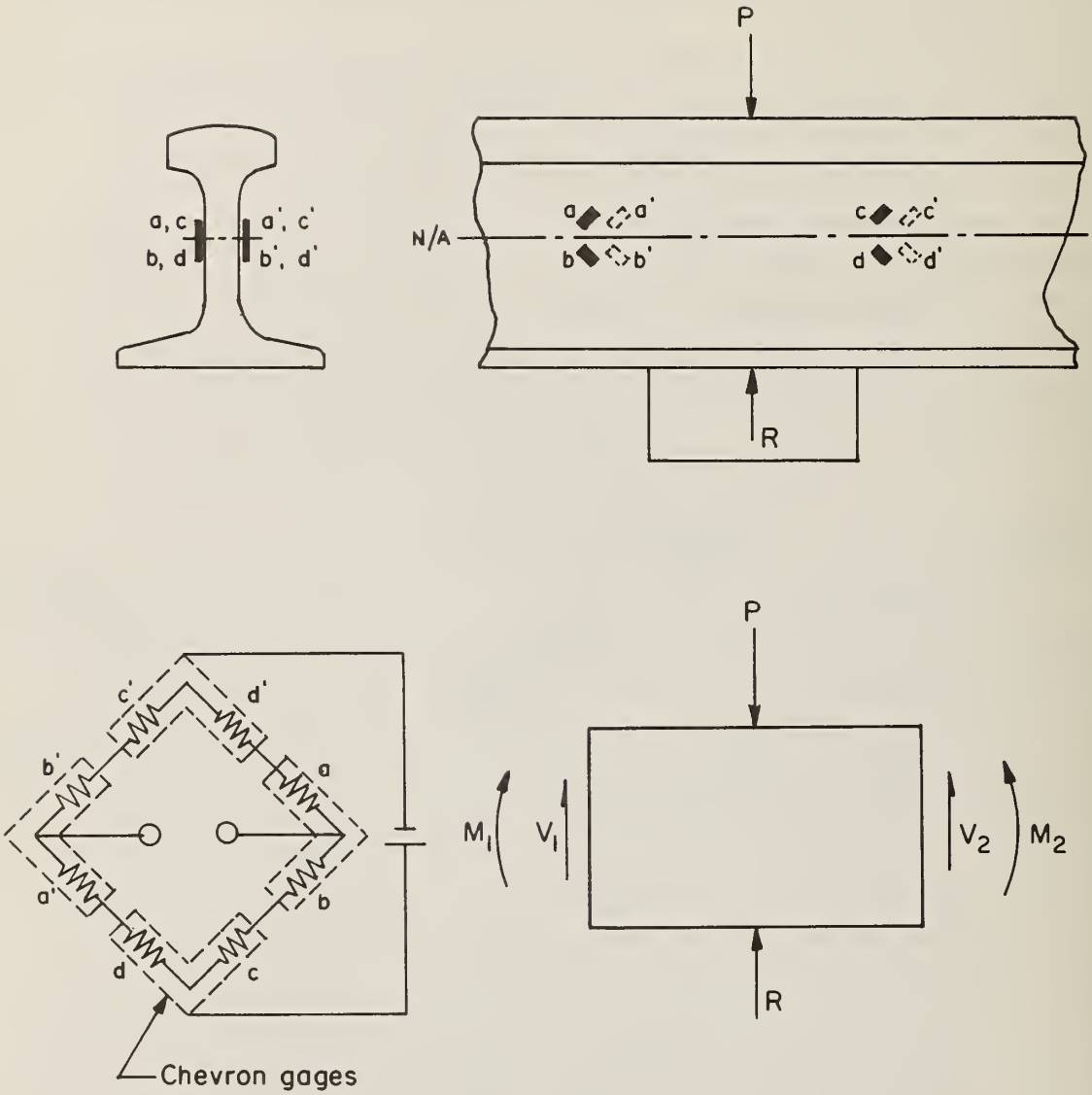

FIGURE 4-9. TIE PLATE LOAD CIRCUIT USING RAIL SHEAR STRESS

Compensation of this gage circuit is inherent in the circuit configuration with the exception of needing a value for wheel load P. Longitudinal rail strains are cancelled by the adjacent gages of each chevron and this cancellation is not affected by longitudinal restraint of the tie. Bending strains for lateral and vertical axes are cancelled by locating the gages about the neutral axis. All gages are mounted on 45° angles to respond to maximum shear strains due to vertical shear forces.

4.1.3 Summary of Conclusions and Recommendations

Although tie plate load cells are not available off-the-shelf, the concepts used for the load cells discussed in this section can be used to design and fabricate tie plate load cells specifically suited for rail joint and rail fastener test programs. From the values tabulated in Table 4-1 it is possible to produce a load cell with lateral and vertical outputs and perhaps overturning moment with combined inaccuracies less than $\pm$ 5 percent for each axis and sensitivities at least to 1.0 mV/V/F.S. No data are presently available describing frequency response of a tie plate load cell, but test requirements indicate that frequency response should be documented out to 100 Hz with less than a + 1dB, - 3dB variation of response in that range. This would be only 5 times faster than the 20 Hz basic wheel pass frequency for a truck having a 6 foot axle spacing and traveling at 80 mph. Using other criteria, the rise time corresponding to a 100 Hz system is only five times faster than the time it takes to traverse the influence length X_1 for relatively stiff track ($X_1 \cong 27$ inches) when traveling at 80 mph. Accurate measurement of impact loads from loose rail joints or wheel flats may require that the frequency response be substantially higher, but this probably exceeds the practical limitations for load cell design.

Cost of the load cells can range from $2000 to $10,000 each, plus design and development costs for a particular configuration. Full scale ranges should be 20,000 lb vertical, 20,000 lb lateral, and 100,000 in-lb rollover moment. Over load capacity should be at least 100% without damage and tie plate designs incorporating discrete load washers should allow for full load on each individual washer.

Any opportunity to instrument a separate load cell assembly which can be installed beneath the rail fastener by modifying the concrete invert should also be considered. This will increase the potential of designing a more accurate transducer and provide for fastener changes at the test site without affecting the load cell.

4.2 WHEEL/RAIL FORCES

As discussed in Sections 3.1.1 and 3.2.1, wheel/rail forces represent key parameters for correlating vehicle and track interactions. The ability to measure these forces from either side of the wheel/rail interface is possible and each approach has particular advantages and disadvantages. For both the rail joint and rail fastener programs, the greatest advantages lie with measurements taken from the vehicle. These data can be used to select particular sections of track for the detailed measurements of track component performance. Furthermore, wheel/rail forces measured on a typical vehicle can be correlated directly with the track response measurements made while the instrumented vehicle is traversing the track test section.

The two main techniques that have been used for measuring wheel/rail forces from the vehicle are instrumented wheels and instrumented trucks. These two techniques will be discussed in Sections 4.2.1 and 4.2.2, respectively. The technique for measuring wheel/rail forces from the track side of the interface is discussed in Section 4.2.3.

4.2.1 Instrumented Wheels

Several instrumented wheel sets have been developed over the past two decades. These instrumented wheels are generally made from either the standard, solid-disc wheel, or from specially fabricated spoked wheels. The disc represents the best approach in terms of maintaining the original loading environment, but it can suffer from cross talk and variations in sensitivity unless great care is taken in the development of the wheel into a transducer. The spoked wheel is more representative of a transducer made to simulate a wheel because it is fully

machined to close tolerances and provides "simple" beams on which to mount strain gages. There is some question as to the high frequency mass and stiffness effects of the spoked wheel, especially at high speeds, although no documentation of this has been found. There have also been subjective decisions governing the choice between the two approaches; namely, the acceptance by the operating property personnel of an unfamiliar looking piece of equipment having questionable reliability and safety.

The Japanese National Railway (JNR) has been developing and improving techniques to measure wheel loads since 1952 [4-7]. They have also emphasized the performance of the spoked wheel over the disc wheel as the basis for an instrumented wheel set based on the claim that the spoked wheel offers better control of sensitivities and load isolation. Their current use of an 8 spoked wheel provides the capability for both cyclic and continuous vertical and lateral outputs. The cyclic output provides a more precise amplitude measurement which can be used to adjust for minor drift problems encountered with the continuous output. The continuous vertical output also responds to brake shoe forces and longitudinal loads. Figure 4-10 shows the two primary circuits used by the JNR for continuous lateral, and cyclic vertical outputs. The lateral circuit measures simple bending strains on each spoke. The vertical circuit measures axial strain twice per revolution on two diametrically opposed spokes. Continuous vertical output would normally be achieved by gaging additional spokes and summing them in a single bridge. The JNR only uses disc wheels for instrumented wheel sets when no other alternative is available.

The Swiss Federal Railroad (CFF) developed a 12-spoke instrumented wheel [4-8] for the ORE. This wheel uses 6 spokes to measure lateral loads using the $\frac{dM}{dx}$ concept discussed in greater detail in Section 4.2.3. Vertical loads are measured using the other 6 spokes. Figure 4-11 illustrates the lateral force measuring principle as it applies to the spoked wheel. The circuit measures the difference in bending strains between locations B and A which are proportional to the shear force in the spoke. This shear force is in turn proportional to lateral force Q. If the spoke is not symmetric about its radial axis, there will also be a first order error proportional to $P \cdot \Delta e$ where P is the wheel load and Δe is the offset between the two gaged locations.

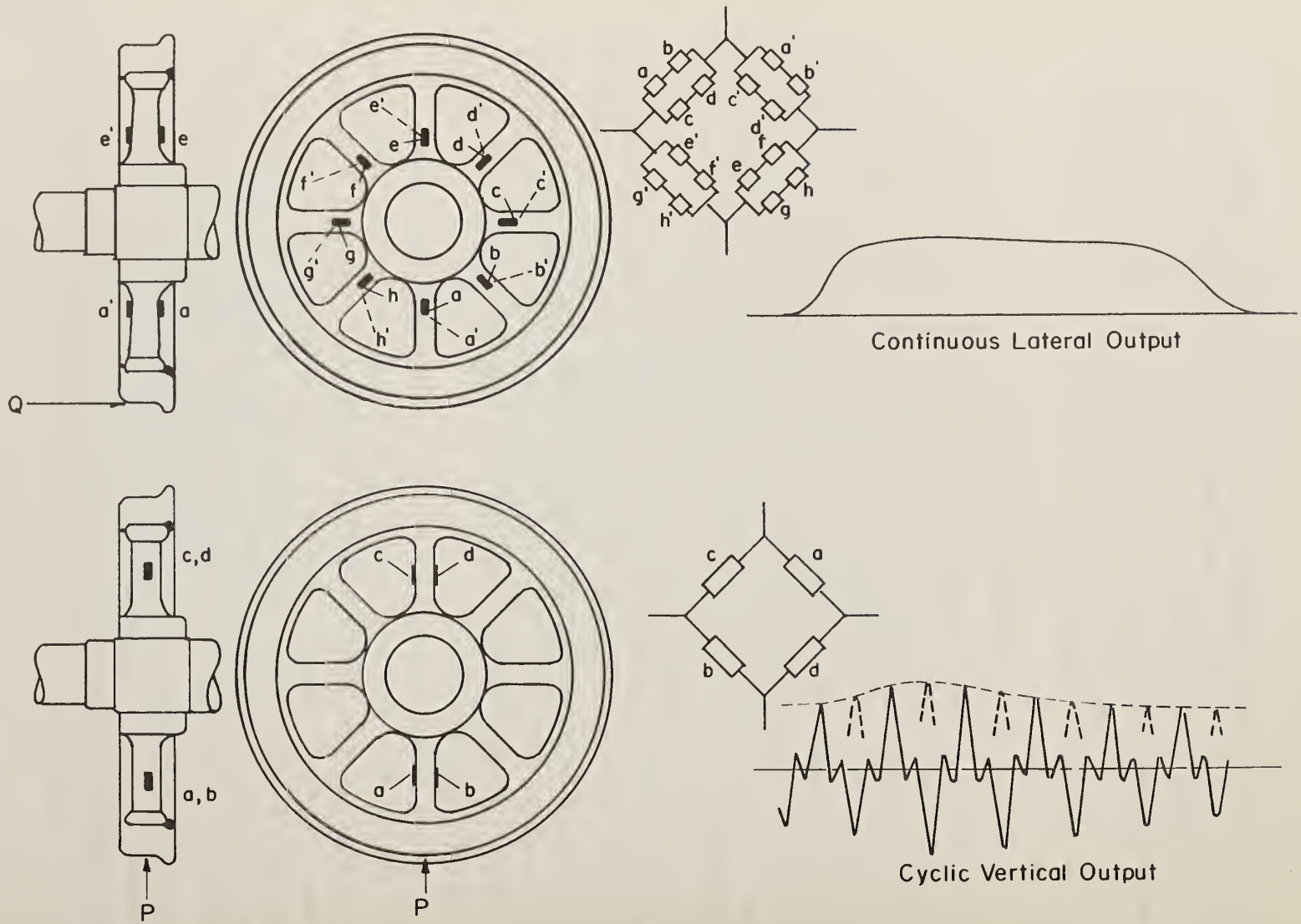

FIGURE 4-10. INSTRUMENTED SPOKED WHEEL

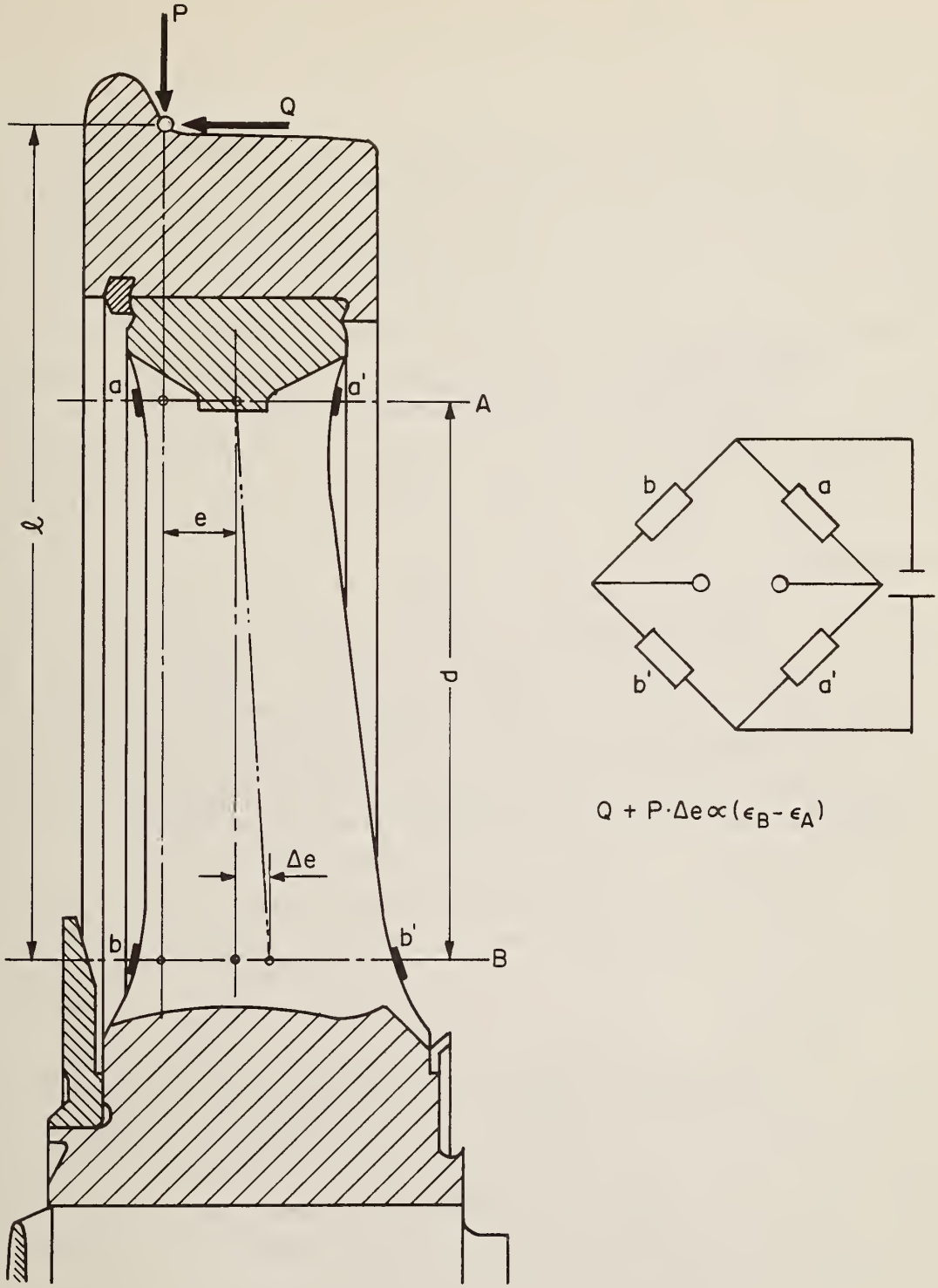

FIGURE 4-11. LATERAL FORCE CIRCUIT FOR INSTRUMENTED SPOKED WHEEL USING SHEAR FORCE TECHNIQUE

Figure 4-12 shows the lateral output from individual spokes and the summed output. Interpretation of the summed output in Figure 4-12 reveals an average value for cross talk of about $\pm$ 6 percent (error in lateral output with respect to full scale changes in vertical input). The value of cross talk would, however, under normal operating conditions, be less than $\pm$ 3 percent based on the nominal vertical load not varying more than $\pm$ 50 percent.

Figure 4-13 shows the response of one of the vertical load measuring spokes as a function of wheel rotation and lateral inputs. Cross talk in this case appears to be on the order of 5 to 10 percent for the single spoke, but it may be less for a summed output due to compensation effects. However, there is no evidence in the literature that the vertical signals have been obtained as a summed output.

The ORE has also sponsored research in the development of the disc wheel [4-8]. These developments have been pursued by the Swedish State Railway (SJ) since the late 1950's [4-9], and this early work has become the basis for most of the recent developments of disc wheels as lateral force transducers. The fundamental technique which allows the standard wheel to be used is the strain search technique illustrated in Figure 4-14. A series of strain gages are mounted along a radial line on both the inside and outside surfaces of the wheel. A set of measurements are made for several combinations of vertical and lateral load. The curves produced from these measurements quickly locate the radius of a circle which produces a minimum amount of cross talk. Whether this location actually occurs on the inside or outside of the wheel depends on the particular wheel configuration.

Normally, six active gages are mounted at 60° intervals along the circumference. These may be matched by an additional six active gages mounted on the opposite face of the disc for added sensitivity, as shown in Figure 4-15, or compensated by "dummy" gages which may achieve lower cross talk due to vertical loads at the expense of reduced sensitivity. Centrifugal force effects from wheel rotation are compensated by the full bridge network, but a half bridge must be externally compensated with a correction factor.

The Association of American Railroads (AAR) has instrumented all four CK-36 cast steel wheels of a Barber S-2 100-ton freight car truck for the FRA.

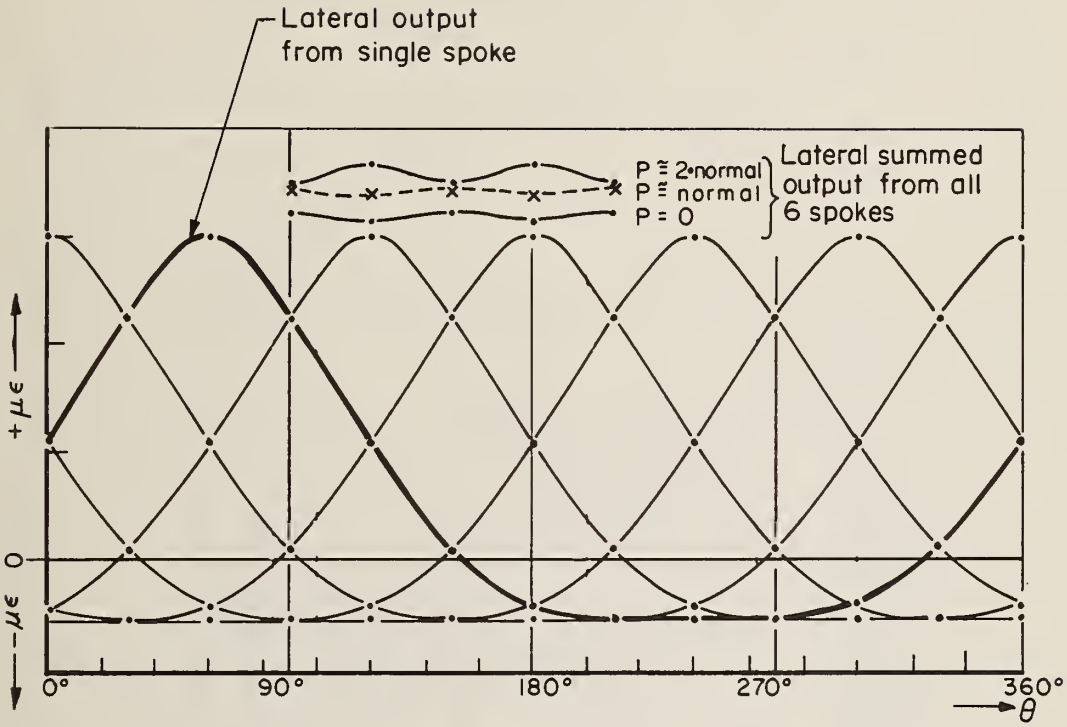

FIGURE 4-12. LATERAL OUTPUT SIGNAL FROM INSTRUMENTED SPOKED WHEEL

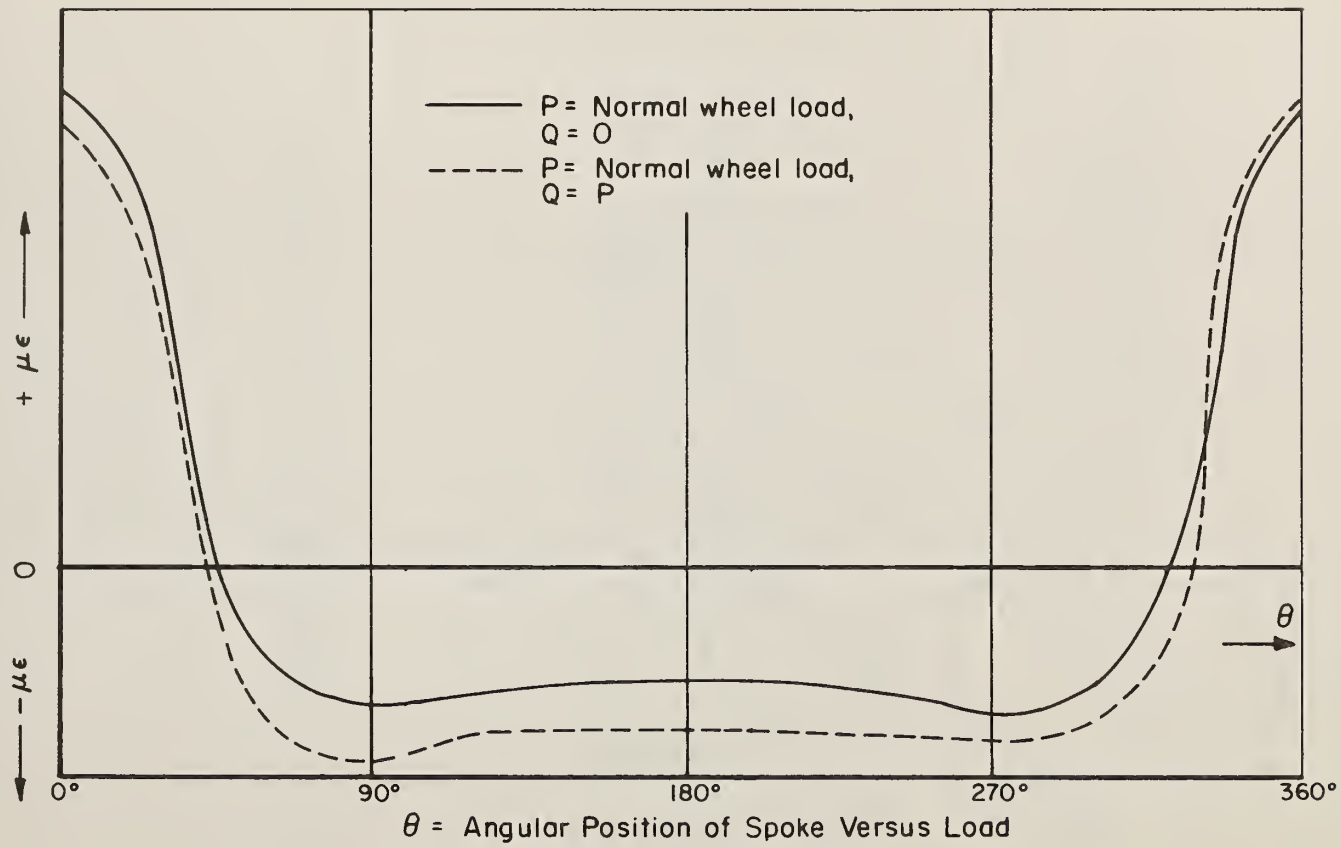

FIGURE 4-13. LINES OF INFLUENCE $\epsilon = f(\theta, Q, P)$ FOR ONE VERTICAL MEASUREMENT SPOKE OF THE CFF MEASURING WHEEL

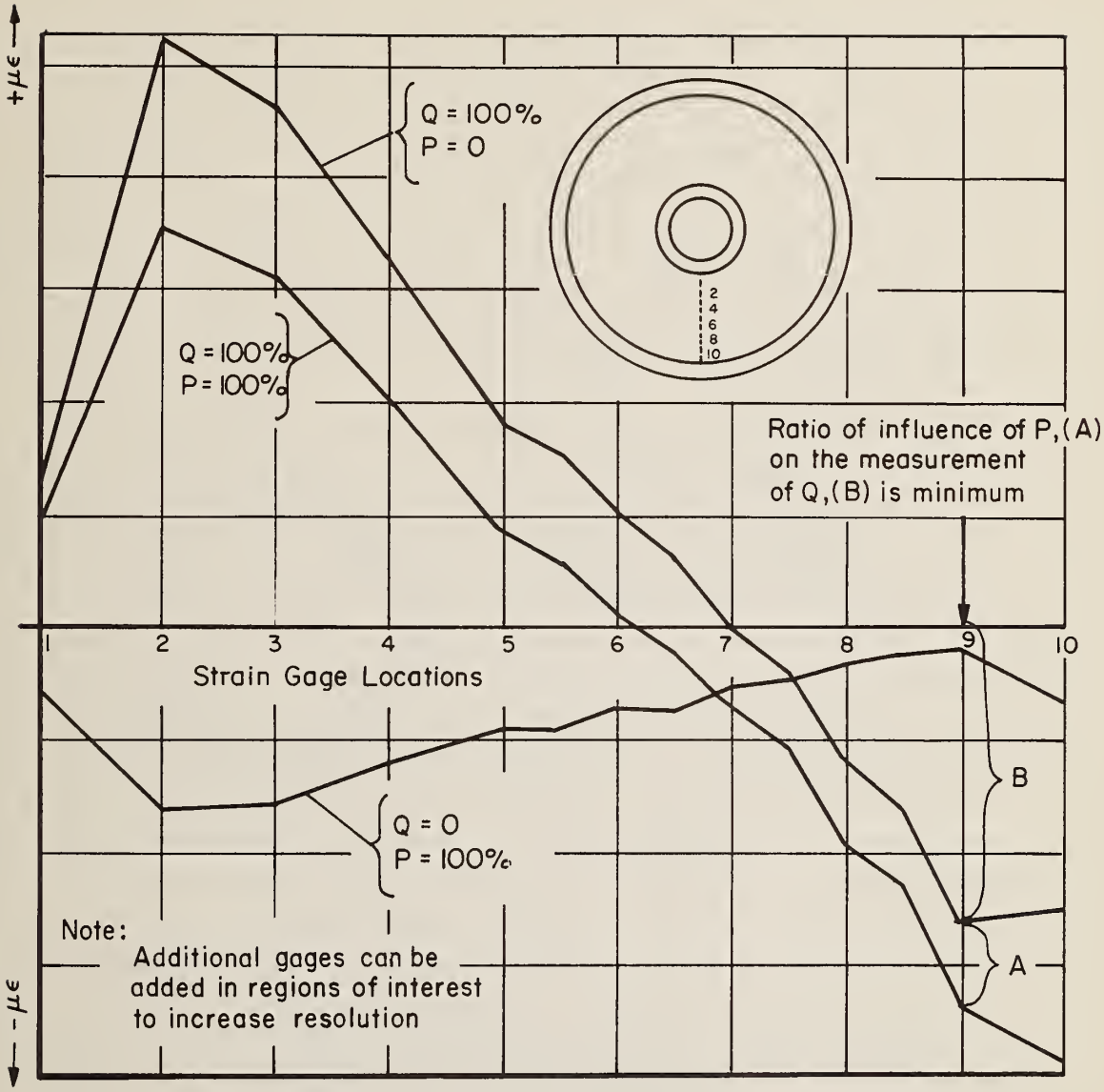

FIGURE 4-14. STRAIN SEARCH TECHNIQUE FOR A DISC WHEEL

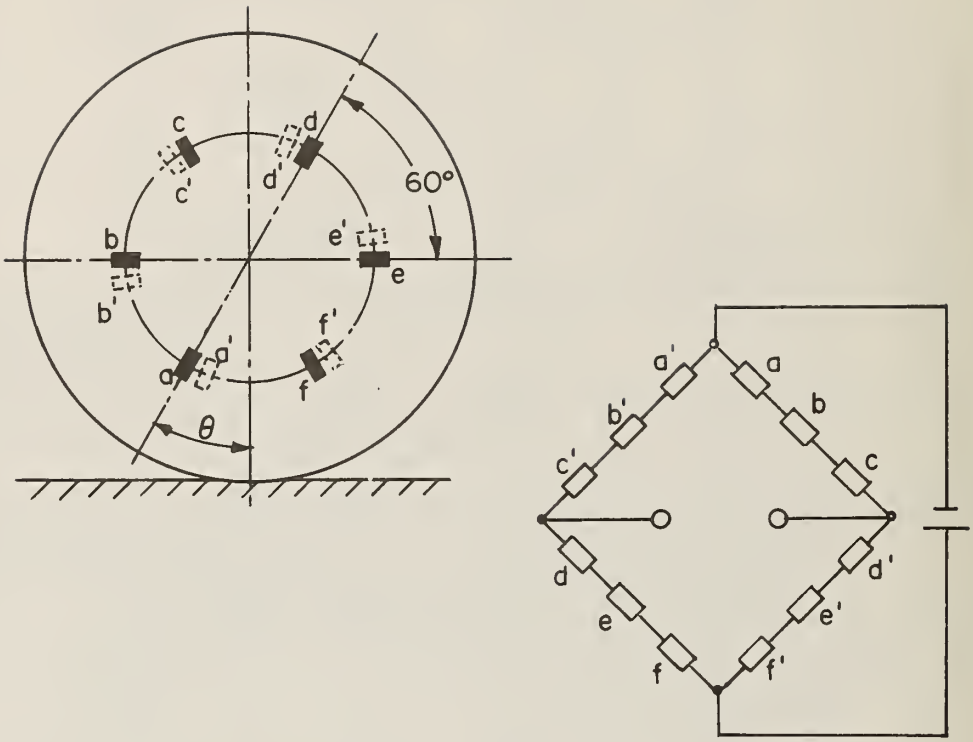

FIGURE 4-15. LATERAL FORCE CIRCUIT FOR INSTRUMENTED DISC WHEEL

The strain search technique was used to locate strain gages at 60° intervals for measuring lateral forces. Strain gages measuring vertical force are located at 90° intervals around the wheel circumference. Two thermocouples are used to measure the wheel web temperature. The signals are transmitted to signal conditioners and amplifiers through slip rings attached to the ends of each axle. The outputs from all six of the lateral gage locations are combined to give one lateral force output signal. The outputs from opposite vertical gage locations are combined to give two vertical force signals. The three force signals and two temperature measurements give a total of five output signals for each wheel.

The General Motors Electro-Motive Division (EMD) locomotive wheel [4-10] uses transversely mounted gages for bridge completion which are interlaced with the active gages. This technique will increase sensitivity slightly due to Poisson strains and will also partially compensate for centrifugal strains.

The Canadian National (CN) Research Center is developing an instrumented wheel set using 36-inch diameter standard disc wheels, but they are using cast wheels instead of wrought wheels. This was done to obtain a wheel thickness that is uniform within 1/16 of an inch, which is considerably better than wrought wheels. Lateral loads are measured using 8 gages at 45 degree intervals on the back side of the plate. In addition, there are 8 dummy gages mounted on the wheel hub for temperature compensation and bridge completion. The measurement technique used here is to measure bending strain directly as a function of lateral load. Sensitivity of each individual gage is approximately 1600 microstrain for 35,000 pounds lateral load. However, the full summed bridge produces only 360 microstrain for that same 35,000 pound load. They are using foil gages with a 1/4-in gage length and a gage factor of 2.04. They are apparently getting very good linearity from this measuring technique. Cross talk is in the neighborhood of $\pm$ 5 percent, this includes about 2 percent interference from vertical load and the remainder is caused by variations in wheel response around the circumference of the gage circle. The physical separation of the active and compensating gages does not provide compensation for temperature gradients due to braking. However, temperature compensation in a uniform temperature field should be good because previous work done by others has indicated that temperature differentials

between the two gaged regions amount to only 3-4° F. Compensation for the centrifugal effects on the lateral gages will be done during data processing by applying a speed coefficient determined from a laboratory spin test.

To date, all instrumented disc wheels produce a periodic measurement of vertical load and the output frequency is usually twice per wheel revolution. Some wheels have a hole drilled near the rim with active gages placed inside the hole for increased sensitivity [4-10], while others use radially oriented pairs of gages along one diameter, as shown in Figure 4-16. This periodic output from 2 samples per wheel revolution can only resolve harmonic variations with wavelengths greater than the wheel circumference (based on sampling theory with 2 samples per cycle). If, for example, a 36-in wheel measures vertical load twice per revolution, the minimum wavelength of load variations that could be resolved would be about 10 feet, and preferably more like 15-20 feet. A sample interval of about 1/8-inch is needed to resolve the high frequency (2000 Hz) wheel forces from joint impact with a train speed of 30 mph. Therefore, this requires an essentially continuous measurement of vertical load.

Vertical sensitivity is affected by the changing lateral location of the contact patch on the wheel tread. The CN has measured a $\pm$ 3 percent variation in sensitivity across the tread. This factor is not as significant for errors in lateral output where the higher lateral loads are caused by flange contact, which determines the contact patch location.

A major problem common to both types of instrumented wheel sets is the performance and reliability of the slip rings used to transmit the excitation output signals for the strain gage bridges. After 15 years of development, the JNR [4-7] has a silver-graphite slip ring design which uses rubber mounts with a natural frequency of 80 Hz for vibration isolation. Rail joint accelerations as high as 50 g's have been measured at the journal box where the slip ring is mounted. This slip ring assembly can be operated up to about 1000 km (600 miles) before repair and cleaning are necessary. Variation in contact resistance are said to be 0.001 ohms. Depending on bridge impedance and sensitivity, this could cause 0.5 to 2 percent nonrepeatibility. The JNR slip ring assembly handles up to four full bridges (16 contacts).

Due to the undesirable qualities of slip rings, the CN researchers are using telemetry for their instrumented wheel set. They are using a small device

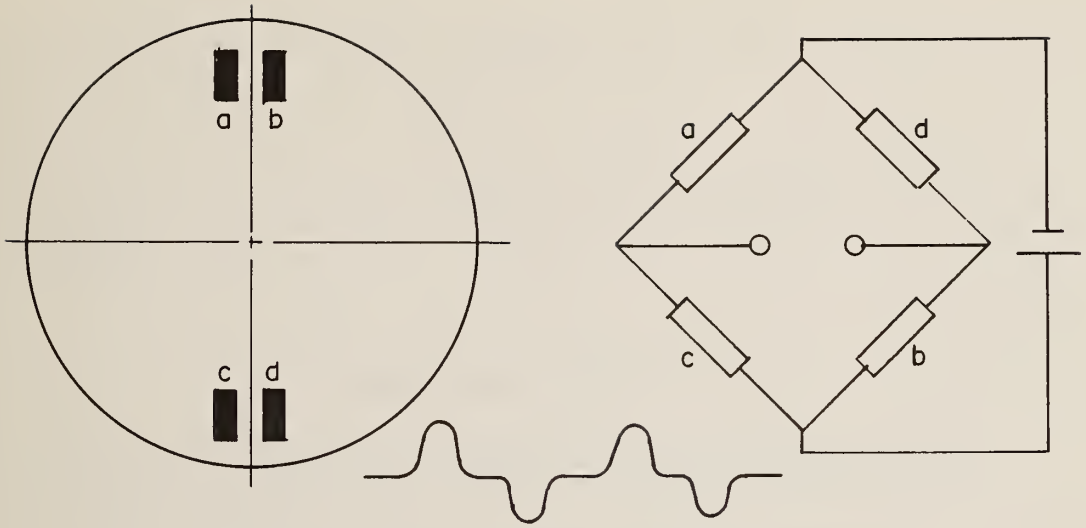

Face-Mounted Gages With Four Active Elements

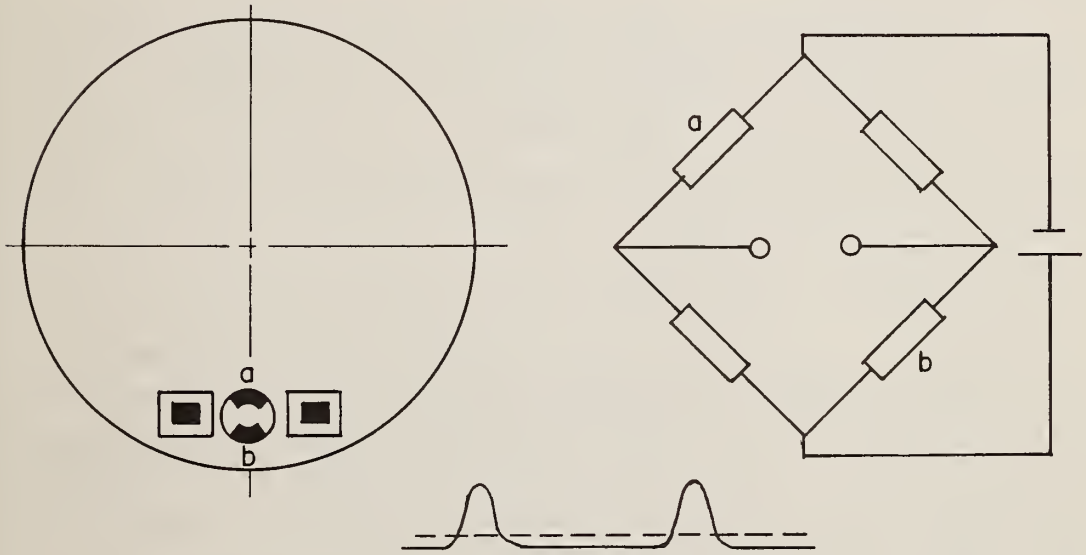

Hole-Mounted Gages With Two Active Elements

FIGURE 4-16. VERTICAL FORCE CIRCUITS USED ON INSTRUMENTED DISC WHEELS

which is apparently a fully integrated signal conditioner, VCO, and transmitter operating from a small (but very expensive) battery, all of which is installed in a junction box strapped to the axle. There are two of these units per wheel and each has its own antenna. The antenna consists of an aluminum strap curved into a semi-circle and spaced from the axle by small insulators. The two antennas then form a full ring which is aligned with a receiver antenna ring mounted on the truck.

4.2.2 Instrumented Trucks

The instrumented truck is a transducer system which is one step removed from the wheel/rail interface. Therefore, high-frequency response is degraded due to the intermediate spring/mass systems and multiple load paths. This technique has been applied, however, and useful low-frequency data has been collected [4-11].

For the particular task of measuring vertical and lateral wheel/rail forces, the following parameters should be monitored on the truck.

- vertical force at axle bearings
- vertical accelerations at axle bearings
- axle bending moments
- lateral force at axle bearings
- lateral accelerations.

The acceleration measurements can be used to obtain primary information related to rail joint or fastener performance and for mass compensation for the axle bearing load cells. With proper calibration, the acceleration compensated load cells can provide an extended bandwidth of useful response, but this is still limited by resonant frequencies of truck components.

Other parameters have been measured with instrumented trucks [4-11], but they reflect vehicle performance and are not of primary interest for this track program. Included among these are:

- axle torque
- longitudinal acceleration

- torsional velocities
- relative lateral displacements
- bolster bending strains.

Additional stress and temperature information has been measured on powered trucks of suburban transit cars [4-12]. Semiconductor strain gages were used to increase signal strength, but some data were still degraded with S/N ratios on the order of 20 dB. A high EMI/RFI interference was caused by close proximity to the electric drive motors. Results of this study revealed dynamic forces up to 10 times static loads due to rail joint impacts. As to the particular performance characteristics of the instrumented trucks, no information has been found which documents even the most basic accuracy specifications.

4.2.3 Instrumented Rails and Track

Instrumenting the rails with strain gages can provide useful information about wheel/rail forces. The normal working strains in rail are sufficiently high so that gage sensitivity is not usually a problem. However, the relatively complex geometry of the rail cross-section and the complexity of the loading environment require a variety of approximations for relating the strains measured at specific points to corresponding forces. For example, the gage configuration shown in Figure 4-17 has been used to measure lateral rail loads [4-6]. This measurement is based on the assumption of simple bending in a cantilever beam with the loads applied outside the gaged region (near the free end). This assumption gives a linearly increasing bending moment through the gaged region. The measurement and subtraction of bending strains at the two locations A and B will then be linearly related to the lateral force Q shown in Figure 4-17. Any additional bending moment from an eccentric vertical load on the rail head are assumed to be constant and will be eliminated by the subtraction process. What is neglected in this measurement are the unknown reaction moments from the lateral bending and torsional stiffness of the rail. These unknown moments will change the bending moment curve in the gaged region and their effect will vary according to the reaction provided by adjacent ties and fasteners. As a result, this circuit will be suceptable to a variety of measurement errors which cannot be readily identified and isolated.

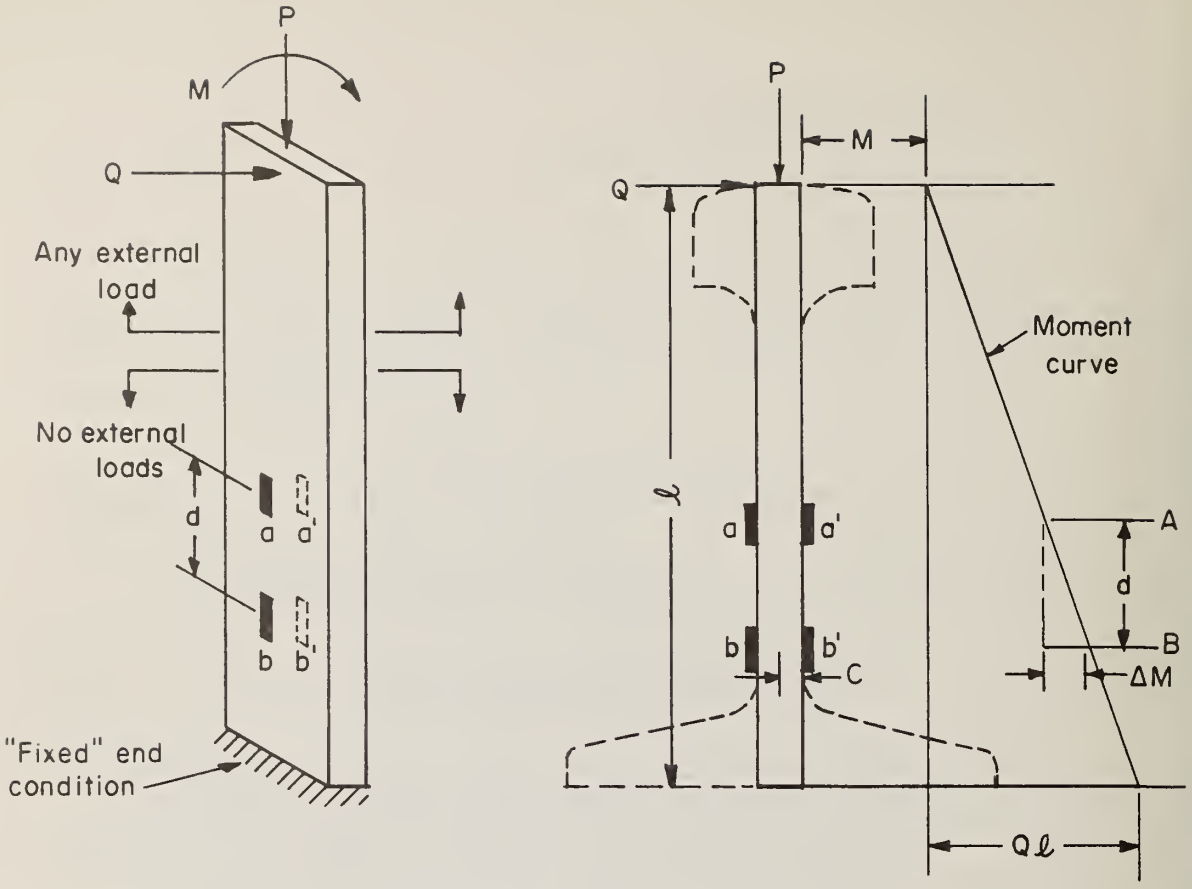

$Q \propto V$ (shear force)

$$V = \frac{\partial M}{\partial x}$$

$$V = \frac{M_B - M_A}{d}$$

$$M_A = \left(\frac{EI}{c}\right) \epsilon_A$$

$$V = \frac{EI}{cd} (\epsilon_B - \epsilon_A)$$

$$Q \propto (\epsilon_B - \epsilon_A)$$

$$\epsilon_A = \epsilon_a - \epsilon_{a'}$$

$$\epsilon_B = \epsilon_b - \epsilon_{b'}$$

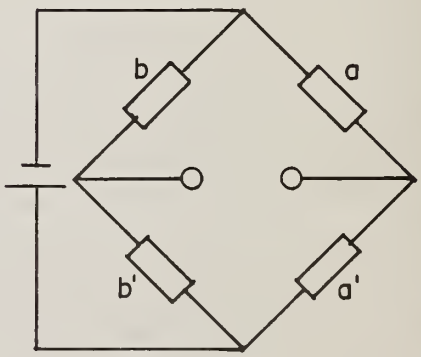

FIGURE 4-17. LATERAL RAIL LOAD MEASUREMENT USING SHEAR FORCE STRAIN GAGE CIRCUIT

The circuit discussed in Section 4.1.2 and shown in Figure 4-9 can be used for measuring vertical wheel load between ties where the vertical load must be opposed by the total shear force at the two gaged locations when the wheel is inside the gaged region. In this configuration, the output is directly proportional to vertical wheel load and the sensitivity should remain constant across the gaged interval. Errors due to gage orientation and location about the neutral axis will have the greatest effect on circuit accuracy. Other circuits [4-8] have been used to measure vertical wheel loads by recording the compressive strain in the rail web directly over a tie plate or the bending strain between the head and base of the rail within an unsupported span. Figure 4-18 illustrates these two techniques. Accuracies of these circuits will be influenced by changes in the boundary and loading conditions during wheel passage, and these changes cannot be readily documented and held constant. Therefore, use of this type of circuit is not recommended for this track program.

4.2.4 Conclusions and Recommendations

Of the three general techniques for measuring wheel/rail forces, instrumented wheels represent the best approach for the rail joint and rail fastener programs. The instrumented wheel set offers a capability for monitoring track characteristics for the initial selection of a test site and provides a continuous, direct measurement of wheel/rail forces that can be correlated with track response data. Use of an instrumented wheel set on the same type of vehicle used for normal service will provide additional data on the source of track loads.

The criteria for performance of an instrumented wheel set should include the following:

- minimize cross axis sensitivities by strain search techniques
- provide for "continuous" output for both vertical and lateral signals
- if the wheel set is part of a motorized truck, the gages must be located to minimize sensitivity to drive torque in the wheels. The measurement system must also be designed to reduce EMI/RFI interference from the traction motor.

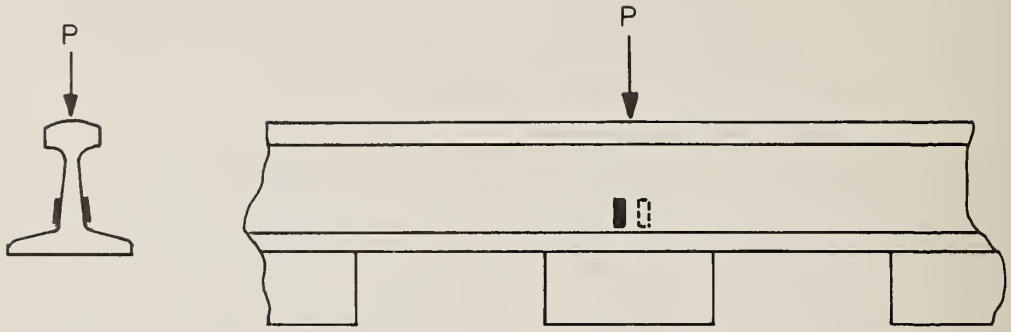

FIGURE 4-18a. VERTICAL FORCE P PROPORTIONAL TO COMPRESSIVE STRAIN

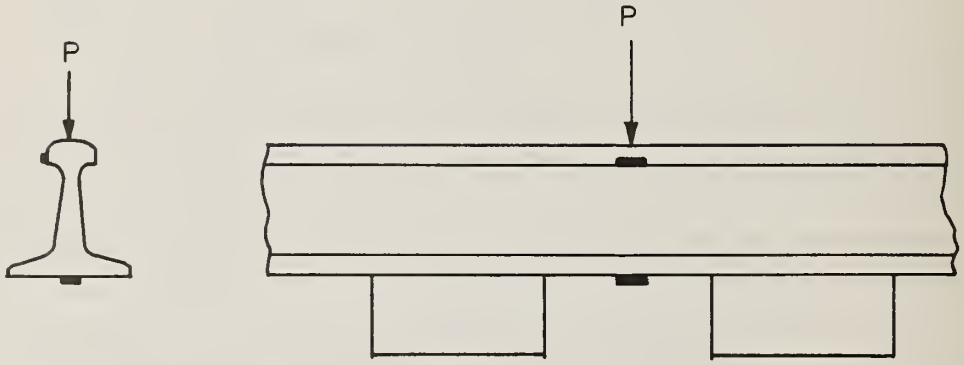

FIGURE 4-18b. VERTICAL FORCE P PROPORTIONAL TO BENDING STRAINS

- frequency response to 2 kHz is needed for rail joint program. Frequency for the rail fastener program may be limited to 100 Hz.
- combined inaccuracies should not exceed $\pm$ 7 percent for lateral and vertical outputs (static calibration).

4.3 RAIL DEFLECTIONS

Rail deflection measurements include absolute deflections of the rail relative to a field reference and relative deflections between track components. Rail deflection can be measured statically or dynamically, as discussed in the following two sections.

4.3.1 Static Deflection Measurements

Static deflection measurements are required primarily for determing general track properties. Establishing rail profile, cross level, and other track geometry data in the loaded and unloaded conditions is needed to document the track characteristics in the vicinity of the measurement location. Techniques used to make these static measurements include reference beams and dial indicators, standard surveyor's equipment, and the transducers used for dynamic deflection measurements.

4.3.2 Dynamic Deflection Measurements

The measurement of dynamic deflections is a relatively straightforward operation. The state-of-the-art of displacement transducers (where contact between measuring points is permissible) is well advanced. Resolution and accuracies on the order of 0.5 percent of full scale can be readily obtained with commercial "off-the-shelf" devices. By comparison to the accuracies realistically obtained from the load cells described in Sections 4.1 and 4.2, the deflection measurements can be an order of magnitude better.

Two primary difficulties encountered when making dynamic deflection measurements are survival of the devices in the relatively rugged environment and

establishing references from which the measurements are to be made. Establishing "absolute" reference points adjacent to the track structure requires going deep enough, or far enough to the side of the track, to locate ground which does not move relative to the resolution of the system. Past experience indicates that absolute deflection measurements related to rail joint and rail fastener performance can be referenced to "ground" by attaching the transducer to a rod driven down into the subgrade and isolated from ballast motion by an oversized casting which surrounds the rod. The rod should be approximately one inch in diameter and a minimum of 3 feet long. The casing should then be 2-1/2 to 3 inches in diameter and about 2 feet long so the rod can protrude deeper into the subgrade and also extend above the casing sufficiently to attach the transducer fixture. Monitoring the accelerations at the top of the rod will provide an indication of undesirable motions.

Relative measurements must also be isolated from undesirable displacements. For example, if dynamic track gauge is to be measured, and the tie is used as a reference, then tie bending could readily distort the intended output. The deflection fixture developed by Battelle for the Track Train Dynamics Program (Task 13A) is an example of a measurement system that provides dynamic displacement measurements of the track structure without distortion due to tie bending. A conceptual drawing of the system is shown in Figure 4-19. The lateral displacement measurements were referenced to a stable base consisting of two machined plates connected by steel tubes running beneath the rails and alongside the tie in the crib area, each plate was attached to the upper surface of the tie toward the outer end by two lag screws and sets of neoprene grommets. This allowed bending of the tie without distortion of the lateral measurements of rail motion.

Past experience indicates that the Linearly Variable Differential Transformer (LVDT) offers excellent performance characteristics for measuring dynamic deflections. The fully integrated version of the LVDT, called a DCDT, has built-in high frequency excitation and signal conditioning. A DCDT system provides a DC output voltage which is directly proportional to displacement of the core slug. Output levels are usually $\pm$ 10 volts full scale and excitation is usually $\pm$ 15 VDC. Although they are extremely rugged, reliability may suffer

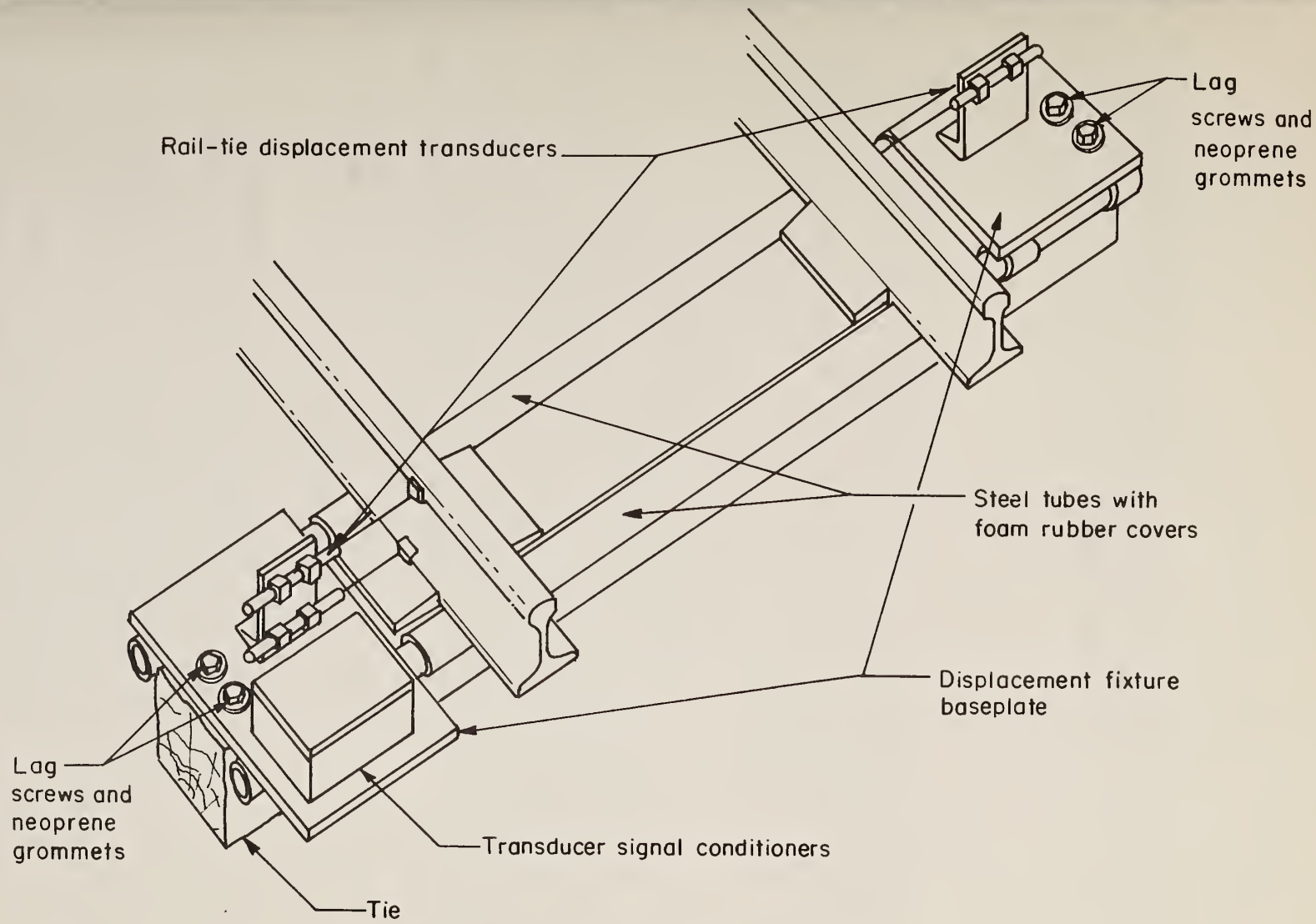

FIGURE 4-19. RAIL DISPLACEMENT TRANSDUCER FIXTURE

from attaching a DCDT directly to the rail because of the high shock levels from joint impacts and flat wheels (accelerations on the order of 500 g's peak have been measured in this environment). Some isolation may be required to protect the transducer if the shock environment is excessive. Frequency response of a DCDT with a $\pm$ 1.0 inch full scale range is typically 100 Hz. Lower range devices typically have greater bandwidths.

Connection of the DCDT core slug to the rail or other measured surface can be accomplished with a small phenolic block epoxied to that surface and an interconnecting nonmagnetic threaded rod. Other techniques have included spring loaded rollers [4-5] or other contacts that rely on natural frequencies greater than the range of frequencies to be measured. In this case the natural frequency should be greater than 100 Hz.

4.3.3 Conclusions and Recommendations

Static deflection measurements should be made using conventional displacement measuring techniques. As a rule of thumb for this kind of documentation, a minimum resolution for any particular measurement should be no more than 10 percent of the full scale deflection. For example, to monitor any change in the length of a rail joint bolt due to elastic strains, a range of about 0.015 inch, it would be desirable to have a minimum resolution of 0.0015 inches. A vernier caliper would than be adequate for that measurement. The additional accuracy of micrometer calipers would not be totally warranted due to the difficulty in maintaining smooth polished surfaces on the bolt ends for the entire duration of the test.

Using the same guidelines, measurement of static rail profile for both loaded and unloaded conditions should be resolved to about 0.025 inch assuming vertical deflections under load on the order of 0.25 inch.

It is recommended that all track-mounted dynamic deflection measurements be made using DCDT's. The dynamic deflection measurements for both test programs will range primarily from 0.10 to 1.00 inch full scale. With the accuracy and resolution of a DCDT, it would be possible to use one over only 10 percent of its normal full scale range and still resolve deflections up to about

1 percent. It is therefore suggested that one, or at most, two ranges of deflection would be sufficient when selecting the transducers. Additional range adjustment can then be done with simple amplifier circuits. This would minimize the total inventory of DCDT's.

4.4 RAIL STRESS

Measurements of rail stresses, especially important for the rail joint test program, involve standard strain gaging techniques as they apply to long term testing. The techniques used to apply the strain gages depend primarily on the required life span of the installation. A long term program such as the rail joint test program may require installations that withstand weathering and service for more than two years. Furthermore, gage lengths should be 0.25 inch or less for installations with high stress gradients, and this which precludes the use of weldable gages. Therefore, the use of baked on, foil strain gages is recommended for these applications and this would preclude the installation of the gages at the test site.

Weldable gages can be used to measure uniform stress fields such as longitudinal thermal rail stresses. The weldable gages require less preparation and can be readily applied in the field, but are not suitable for strain measurements around bolt holes because of their size.

4.5 BOLT FORCE

The clamping force provided by joint bolts can be measured with commercially available load washers designed for this purpose or by substitution of special instrumented bolts. Depending on the particular failure mode responsible for the loss of clamping force, one approach may be better than the other. If the reduction in clamping force is due in part to wear of the lock washer interfaces, then an instrumented bolt would be the best choice because all of the fastener components would be identical to those used for standard joints. If, on the other hand, the reduction in clamping force is due to stretch in the

bolt or deformation of threads, then the load washer would have less effect on the measurement than the modified bolt. Unless a better determination of this failure mode can be made prior to the test program, it is recommended that both techniques be tried on separate bolts to better determine the most suitable method for measuring bolt forces. In either case, these measurements would be supported by the static deflection measurements discussed in Section 3.2.4.

Commercial load washers have a standard capacity of 80,000 lb for a 1-in bolt. Due to the extremely compact design of these load washers, measurement accuracy is usually lower than for conventional load cells, but calibration of the assembly can increase DC accuracy to around $\pm$ 3 percent, which is more than adequate. The space required within the grip length of the bolt will increase by about 0.7 in. But the longer joint bolts used for heavier rail sections can be used to accommodate this increased length.

If instrumented bolts are used, than accuracy will depend on the capability of the person gaging the bolt and to some extent on the quality of the bolt. It would be desirable to use a standard joint bolt to insure the same material properties and head shape, but this would be offset by reduced performance of the bolt due to reduced cross sections and new stress concentrations introduced by the gaging process. Initial calibration of the bolt should reveal inaccuracies of about $\pm$ 3 percent with proper gaging. The performance may be degraded however during the later stages of joint degradation when the bolt is subjected to shear and bending stresses.

For either measuring technique, care must be taken to insure reasonable long-term accuracy of this measurement, because the zero load reference cannot be reestablished without affecting the test conditions. Unloading one bolt at a time checking zero, and then retorquing to the original reading of the force sensor could be performed at the beginning of each active test phase to improve the accuracy of the dynamic measurements. This would, however have an effect on wear and holding strength of the lock washer. Under full preload, little or no dynamic response from the bolt force sensors is expected. However, the change in bolt load will be a key indicator of joint condition as the joint loosens.

4.6 WHEEL DETECTORS

There are several techniques for detecting the passage of a wheel over a fixed loaction. The simplest device would be a mechanically actuated switch that is tripped by contact with a wheel flange, but it would suffer from physical battering and response time uncertainties. Another approach is to have the leading edge of each wheel interrupt a light or ultrasonic beam which is aligned across the track. This can also be done with relatively simple circuits, but portions of the beam transmitter and receiver must protrude above the rail head on each field side, so it is susceptible to damage. This technique has been used successfully in the Track Train Dynamics program, but frequent damage occurred due to dragging equipment from freight cars. The danger of dragging equipment will be reduced considerably for transit track.

The magnetic detector normally used on hot box detection systems may also be used for this task. This detector is a passive device which responds to the close passage of the wheel flange by generating a voltage pulse. With proper signal conditioning, this pulse can trigger a variety of digital logic circuits.

A simple technique to determine position and speed utilizes two wheel detectors spaced a known distance on either side of the instrumented section. The wheel entering the section trips the initial detector which drives a logic signal "high". When the wheel leaves the test section, it trips the second detector which drives the logic signal "low". Speed is inversely proportional to logic "on" time and can be assumed to be constant within this short interval. The wheel position can be provided by gating a counter to sum the counts from a known oscillator. Location along the section is proportional to the fraction of total counts.

Although a more sophisticated design may be required, it is recommended that a wheel detection system be developed using the magnetic detector. This device is inherently quite rugged and requires little mechanical protection. It is noncontacting and does not extend out of the design envelope of the track structure.

REFERENCES

3-1. Prause, R. H., Meacham, H. C., et al, "Assessment of Design Tools and Criteria for Urban Rail Track Structures", Vol. I, At-Grade Tie-Ballast Track, Report No. UMTA-MA-06-0025-74-3 prepared for U. S. Department of Transportation by Battelle-Columbus Laboratories, April, 1974, PB 233016/AS.

3-2. McConnell, D. P., "On the Torsional Rigidity of Rail Fasteners in the Lateral Plane", DOT/FRA Report, November, 1972.

This paper deals with the resistance of the rail fastener to torsion in the plane of the track, as a factor affecting the stability of the track structure. In addition to a review of the various mathematical models used to simulate the track, this paper also reports on the results of experimental measurements of the torsional rigidity of various types of rail fasteners in use in both the United States and Western Europe, including the type of rail fastener utilized in the construction of the high-speed test track at the High-Speed Ground Test Center of the Department of Transportation, Federal Railroad Administration, located at Pueblo, Colorado. The results of these tests indicate a scheme for increasing the torsional rigidity of track panels. In conclusion, important considerations for the design and selection of rail fasteners for use on continuously welded rail are described.

3-3. Meacham, H. C.,Voorhees, J. E., and Eggert, J. G., "Study of New Track Strcutural Design - Phase II", Report No. FRA-RT-72-15 prepared by Battelle Memorial Institute for the Federal Railroad Administration, August, 1968.

3-4. Meacham, H. C., and Prause, R. H., "Studies of Rail Vehicle Track Structures", Report No. FRA-RT-71-45 prepared by Battelle Memorial Institute for U. S. Department of Transportation, April, 1970.

3-5. "Noise and Vibration Characteristics of High-Speed Transit Vehicles", Report No. OST-ONA-71-7 prepared by Wilson, Ihrig and Associates, Inc. for U. S. Department of Transportation, June, 1971, p 66, PB 202871.

The rapidly expanding problems of urban transportation have resulted in intensified activity in the development and construction

of new fixed route, high-speed rapid transit systems and equipment. The community noise and ground vibration caused by such systems and vehicles is a very important factor influencing public acceptance of these systems. Noise and vibration measurements obtained with modern operational and experimental transit vehicles provide a basis for determining the expected wayside or community airborne noise and ground-borne vibration levels for different types of new transit systems. Through the use of modern design concepts and equipment intended to provide reduced noise and vibration, the wayside noise and vibration caused by rapid transit system vehicles can be made acceptable and the operations can be much quieter than traditionally expected despite the general increase in speed of the newer systems which tends to increase noise and vibration. The purpose of this report is to present a review of the available information on wayside noise and vibration generated by rapid transit vehicles, primarily rail transit vehicles, including projection of the expected noise and vibration levels for higher speed vehicles being considered for future applications.

3-6. Manning, J. E., Cann, R. G., and Fredberg, J. J., "Prediction and Control of Rail Transit Noise and Vibration - A State-of-the-Art Assessment", Report No. UMTA-MA-06-0025-74-5 prepared for U. S. Department of Transportation by Cambridge Collaborative, Inc., April, 1974, pp 111-112.

As systems manager for the Urban Mass Transportation Administration's Rail Supporting Technology Program, the Transportation Systems Center has undertaken research in rail transit noise abatement. As part of this effort, this report contains the results of a critical review of current technology for the prediction and control of urban rail transit noise and vibration, with primary emphasis on the parameters affecting propagation paths. Specifically included are tools for the prediction of wayside noise and vibration adjacent to both at-grade and elevated transit track, groundborne noise propagation from subway tunnels, and noise in cars and in stations. In addition, several noise and vibration

control techniques are evaluated including resilient rail fasteners, floating slabs, noise barriers, elevated structure enclosures, structural damping, and acoustical treatment of stations and tunnels. Specific recommendations are made for areas requiring further research and development. Two of these areas, elevated structure noise and groundborne vibration from tunnels, have been selected for continued investigation under this contract.

3-7. "Preliminary Specifications for Concrete Cross Ties (and Fastenings)", AREA Bulletin, 75 (644), September-October, 1973, pp 83-131.

3-8. Jenkins, H. H., Stephenson, J. E., Clayton, G. A., Morland, G. W., and Lyon, D., "The Effect of Track and Vehicle Parameters on Wheel/Rail Vehicle Dynamic Forces", Railway Engineering Journal, January, 1974, pp 2-16.

A comprehensive summary is presented for a theoretical and experimental program of track/vehicle interaction comprising: theoretical methods and mathematical models; calculations for prediction of forces and stresses; and measurements in the field. The paper describes the mechanisms and characteristics of the following structural components: (1) Joints: design, parameters, weld and bolt-hole failure; (2) Rails: end stresses, rail bending moments; (3) Tracks: wear, damage, mass, stiffness, roughness, force levels, measurement of track forces, and slab track; (4) Wheels: solid wheels, resilient wheels, vehicle instability, and reduction of force levels; (5) Axles: load limits and primary suspension, hollow axles; (6) Traction Motors: frame-mounted traction motors and traction motor environment; (7) Brakes: rheostatic brakes and wheelside protection. Calculations are given for forces, stresses, bending moment and rail displacement for locomotives, passenger and freight vehicles crossing a dipped rail joint. Limiting relationships between wheel load, wheel diameter, and speed of freight vehicles are discussed for design of present and future vehicles.

4-1. Prause, R. H., Meacham, H. C., et al, "Assessment of Design Tools and Criteria for Urban Rail Track Structures", Vol. I, At-Grade Tie-Ballast Track, Report No. UMTA-MA-06-0025-74-3 prepared for U. S. Department

of Transportation by Battelle-Columbus Laboratories, April, 1974, PB 233016/AS.

4-2. Meacham, H. C., Prause, R. H., and Waddell, J. D., "Assessment of Design Tools and Criteria for Urban Rail Track Structures", Vol. II, At-Grade Slab Track, Report No. UMTA-MA-06-0024-74-4 prepared for U. S. Department of Transportation by Battelle-Columbus Laboratories, July, 1974, PB 233017/AS.

4-3. Brown, T. P., and Loach, J. B., "Measurement of Dynamic Forces on Track", Railway Gazette, Vol. 120, No. 22, November 20, 1964, pp 938-940.

4-4. Scott, J. F., Blevins, W. G., and Wilson, J. T., "Technical Studies to Evaluate the Influence of Operational Factors on Track Loading", ASME Paper 72-WA/RT-11, November, 1972.

This paper describes briefly theoretical and physical investigations which have recently been performed by Canadian National Railways. The objective of investigations has been to establish means of reducing the probability of train derailment. While the scope of the derailment study is indicated, two efforts have been singled out for more detailed description. The first effort was directed to determine through computer simulation and analysis programs the lateral loading on curved track which can result from longitudinal train action forces. The second effort to be reviewed was directed to determine, through field measurement, actual lateral tie plate loads on curved track imposed by various vehicle types.

4-5. Rodman, C. W., and Meacham, H. C., "Collection and Analysis of Data on Penn-Central High-Speed Track Response at Bowie, Maryland", Summary Report prepared by Battelle Memorial Institute for U. S. Department of Transportation, October, 1971.

Computer studies of vehicle-track structure dynamics involve modeling of both vehicle and track as dynamic systems. A major objective of this report was to evaluate the accuracy of previous computer programs for rail vehicle/track dynamics. This was done by field measurement of parameters such as track vertical spring rate and track geometry and by evaluation of the output response data

such as track deflection and car body acceleration. The first set of measurements were made in December, 1969 immediately following installation of the instrumentation which included subgrade pressure cells. A second set of measurements were made in June, 1971 to obtain additional subgrade pressure cell readings after the roadbed had a chance to settle and stabilize, and to obtain the dynamic track profile--a parameter necessary for validation of the computer program.

4-6. Anon., Question D71, Stresses in the Rails, the Ballast and in the Formation Resulting from Traffic Loads, Interim Report No. 1, Stresses in Rails, ORE, UIC, Utrecht, April, 1965, D71/RP1/E.

4-7. Konishi, S., "Measurement of Loads on Wheel Set", Japanese Railway Engineering, Vol. 8, No. 3, September, 1967, pp 26-30.

A method for measuring the loads and stresses on a wheel set is outlined. The Japanese National Railway operation schedules are determined based on yearly field tests of running safety by measurements of the derailment quotient (side thrust/vertical load). Field measurements of the loads on a wheel set include the lateral force, the vertical force, and the tangential force in the longitudinal direction acting between the wheels and rails. The paper describes measurement techniques using wire strain gauge bridges on either a spoked or disc wheel. The bridge signals are transmitted to an amplifier in the vehicle using a silver-copper-cadmium slip ring attached to the axle box.

4-8. Anon., Question B10, Constructional Arrangements for Improving the Riding Stability and the Guiding Quality of Electric and Diesel Locomotives and Vehicles, Interim Report No. 11: A comparison of the methods of measuring on the track and on wheels the lateral forces (Y) and vertical loads (Q) caused by rolling stock traveling round a curve at Vallorbe, 1962, ORE, UIC, Utrecht, October, 1964, B10/RT11/E.

4-9. Olson, P. E., and Johnson, S., "Lateral Forces Between Wheels and Rails - An Experimental Investigation", ASME Paper No. 60-RR-6, April, 1960, Available in Anthology of Rail Vehicle Dynamics: Vol. III - Axles Wheels and Rail-Wheel Interaction, edited by S. G. Guins and C. E. Tack, ASME, 1973, pp 253-261.

The paper deals with a new method of measuring continuously the lateral forces between the wheels and the rails over long distances. Fundamental knowledge concerning these forces has been obtained both from studies of the results from short test runs and from statistical assessments of the results from long sections of the Swedish railway network.

4-10. Koci, L. F., and Marta, H. A., "Lateral Loading Between Locomotive Truck Wheels and Rails due to Curve Negotiation", ASME Paper No. 65-WA/RR-4, November, 1965, Available in Anthology of Rail Vehicle Dynamics: Vol. III - Axles, Wheels and Rail-Wheel Interaction, edited by S. G. Guins and C. E. Tack, ASME, 1973, pp 119-129.

Curve-negotiation mechanics and forces resulting when locomotive trucks negotiate curves are well recognized. Recent theoretical analysis has made possible analytic explanation of such curving phenomena. However, meaningful and reasonable prediction of forces resulting in service conditions has been limited owing to the lack of experimental data pertaining to the friction-creep relation between railway wheel and rail. An instrumented wheel-axle assembly was developed and used on 2,3, and 4-axle trucks to study the effect of creep and the transverse load reactions resulting between wheel and rail. Instrumentation was used to measure these forces and the reactions between axles and truck frame under operating conditions. Test results confirm predicted phenomena and indicate the effect of creep on resulting loads. This paper includes a brief and general review of curve-negotiation mechanics and presents the test results and their relation to the theoretical analysis.

4-11. Peterson, L. A., Freeman, W. H., and Wandrisco, J. M., "Measurement and Analysis of Wheel-Rail Forces", ASME Paper No. 71-WA/RT-4, December, 1971.

This paper describes a method used to continuously measure, record, and analyze the lateral and vertical forces between wheels and rails of several types of railroad freight cars under a variety of car and track conditions. The method, using analog-to-digital conversion and computerized data handling, has produced results

relating to a multitude of car and track behavior subject areas. Especially important is the definition, development, and verification of performance "signatures" which are generated in a unique and charasteristic manner by each car in negotiating a given curve. The finding of such "signatures" to be completely reproducible and yet sensitive enough to change with relatively minor track or car component variations, i.e., modifications, supports the belief that these techniques can be applied beyond pure experimental scopes into routine (a) trackside inspection of cars in passing trains; (b) mechanized track inspection; and (c) truck design evaluation.

4-12. Yontar, M., "Research on the Operating Stresses in PATH Railcar Axles, Drive Systems, Wheels, and Rail Joints", ASME Paper No. 66-RR-6, May, 1966, Available in Anthology of Rail Vehicle Dynamics: Vol. III, Axles, Wheels and Rail-Wheel Interaction, edited by S. G. Guins and C. E. Tack, ASME, 1973, pp 139-160.

This paper identifies the cause of premature cracking of axles with inboard bearings as being the bending-mode oscillation of the axle. It points out the importance of gear-tooth separation produced by torsional oscillations in the drive-motor system in both right-angle and parallel-drive gear failures. A unique technique of simultaneous measurement of impulse and thermal loads on the wheel tread is explained and the test data are presented. The relation between the wheel impact loads and the dynamic behavior of rail joints is shown.

4-13. Prause, R. H., Pestel, H. C., and Melvin, R. H., "A Bibliography on the Design and Performance of Rail Track Structures", Report No. UMTA-MA-06-0025-74-7 prepared for U. S. Department of Transportation by Battelle-Columbus Laboratories, September, 1974.

This bibliography was prepared as part of the Rail Supporting Technology Program being sponsored by the Rail Programs Branch of the Urban Mass Transportation Administration. It is based on the reference material that was used to evaluate the technical factors which govern the design and performance of at-grade track structures for urban rail systems. While most of the reference material that has been included is directly related to track used for railroad, rail rapid transit and light rail transportation, there are some additional references on

related topics such as rail vehicle dynamics, soil mechanics, stress analysis, etc. However, this bibliography does not include a comprehensive review of these related topics.

This survey includes much of the published literature on track design, track loading, ballast, wood and concrete cross ties, rail and rail fasteners. It also includes considerable material on track problems such as rail wear and corrugation, rail defects, rail joints, and track degradation.

The formal literature search for this bibliography covered the time period from about 1963 to 1973. The principal sources were the National Technical Information Service (NTIS) file of government reports, Engineering Index, and the Applied Science and Technology Index. Earlier references were identified from the Railroad Research Information Service (RRIS) computerized data base and bibliographies prepared by the RRIS and the Association of American Railroads.

Note: Reference [4-13] contains abstracts for most of the references for which an abstract has not been included in this report.

APPENDIX A

AMPLITUDE STATISTICS

Amplitude statistics, including mean value, standard deviation, probability distribution, and probability density functions, have been recommended for analyzing many of the rail joint and rail fastener measurement parameters. Statistical criteria can be used to determine the number of data points needed for a desired accuracy and confidence level. These factors will be reviewed briefly and illustrated with some typical data representing vertical tie plate force measurements on railroad track.

For illustration purposes, assume that data for vertical tie plate forces for many trains have been processed to determine the peak force, p_i, corresponding to each of N wheel passes. This series of force measurements will be considered as a random variable described by the N independent observations.

Mean Value and Standard Deviation

The mean value $\overline{p}$ and standard deviation σ_p of the peak vertical force data can be estimated using the relations

$$\overline{p} = \frac{1}{N} \sum_{i=1}^{N} p_i, \tag{A-1}$$

$$\sigma_p^2 = \frac{1}{(N-1)} \sum_{i=1}^{N} (p_i - \overline{p})^2. \tag{A-2}$$

These expressions give unbiased, consistent estimates, and Equation (A-2) is relatively efficient. Of course, using a different number of data values or data from different trains would give a different estimate for these parameters, so the mean value and standard deviation estimates can also be treated as random variables having some probability distribution function $P(\overline{p})$. This probability distribution function is known as the sampling distribution for the sample mean $\overline{p}$. If the original load data p_i have a normal distribution, then the sampling distribution for the sample mean will also have a normal distribution for which the statistical relations are well known. However, even for the more general case the sampling distribution function for the sample mean $\overline{p}$ approaches a normal distribution independent of the actual distribution for the original variable p_i* as the sample size N becomes large (N > 10 gives good results) [A-1].

When a normal distribution is assumed for the sampling distribution of mean values, it is possible to determine a range for the true mean value $\overline{p}_t$. This range is based on the estimate mean $\overline{p}$ and the standard deviation σ_p of the variable and a specified uncertainty that the true mean is within this range. The relation is [p. 139, A-1].

$$\overline{P}_t = \overline{p} \pm \frac{\sigma_p t_{n;\alpha/2}}{\sqrt{N}} \qquad \text{(A-3)}$$

where n = N-1 degrees of freedom and $t_{n;\alpha/2}$ is the student t probability distribution function for which tabulated values are readily available (Table 4.9 of [A-1] for example).

The probability statement for this range is

$$\text{Prob}\left[t_{n;1-\alpha/2} < \frac{(\overline{p} - \overline{p}_t)\sqrt{N}}{\sigma_p} \leq t_{n;\alpha/2}\right] = 1 - \alpha, \qquad \text{(A-4)}$$

---

* Typical results indicate the probability density function for <u>peak</u> vertical tie plate loads is closer to a Rayleigh function than a normal function.

where $(1-\alpha)$ is the confidence coefficient. The confidence statement for the range given by Equation (A-3) is that the true mean value $\bar{p}_t$ will be in the specified range with a confidence level of 100 $(1-\alpha)$ percent. Therefore, $\alpha = 0.05$ for a 95 percent confidence level range, and there is a 2.5 percent probability that the true mean is greater than the maximum range limit, and a 2.5 percent probability that the true mean is less than the minimum range limit.

A similar relation can be developed for the $(1-\alpha)$ confidence level for the true variance $\sigma^2_{p_t}$ based on a sample variance σ^2_p for N data samples. The equation for this is

$$\text{Prob}\left[\frac{n\sigma^2_p}{x^2_{n;\alpha/2}} \leq \sigma^2_{p_t} < \frac{n\sigma^2_p}{x^2_{n;1-\alpha/2}}\right] = 1-\alpha, \qquad \text{(A-5)}$$

where $x^2_{n;\alpha/2}$ is the chi-square probability distribution function.

Figure A-1 shows mean value tolerance bands based on Equation (A-3), and Figure A-2 shows similar tolerance bands using Equation (A-5) for the standard deviation. These tolerance, or accuracy, bands represent only the statistical errors based on using a finite number of data points. Additional errors result from the inaccuracies of the measurement, data acquisition, and data recording systems.

In order to evaluate the number of data points needed for a specified statistical error, it is necessary to know the general characteristics of the measurement parameter. Previous experience indicates the standard deviation of peak vertical tie plate force measurements may range from 20 percent to 30 percent of the mean peak load for vehicle speeds up to about 70 mph. Assume that $\sigma_p/\bar{p} = 0.20$ and that the test is designed to obtain an estimate of the mean value and standard deviation within $\pm$ 5 percent of the true mean value at a 90 percent confidence level. Therefore, $\beta \leq 0.25$, and Figure A-1 shows that $N \geq 44$. However, Figure A-2 shows that $N = 44$ gives a tolerance band of about $\pm$ 20 percent at the 90 percent confidence level for standard deviation. Therefore, the statistical accuracy is more critical for standard deviation estimates than it is for mean value estimates.

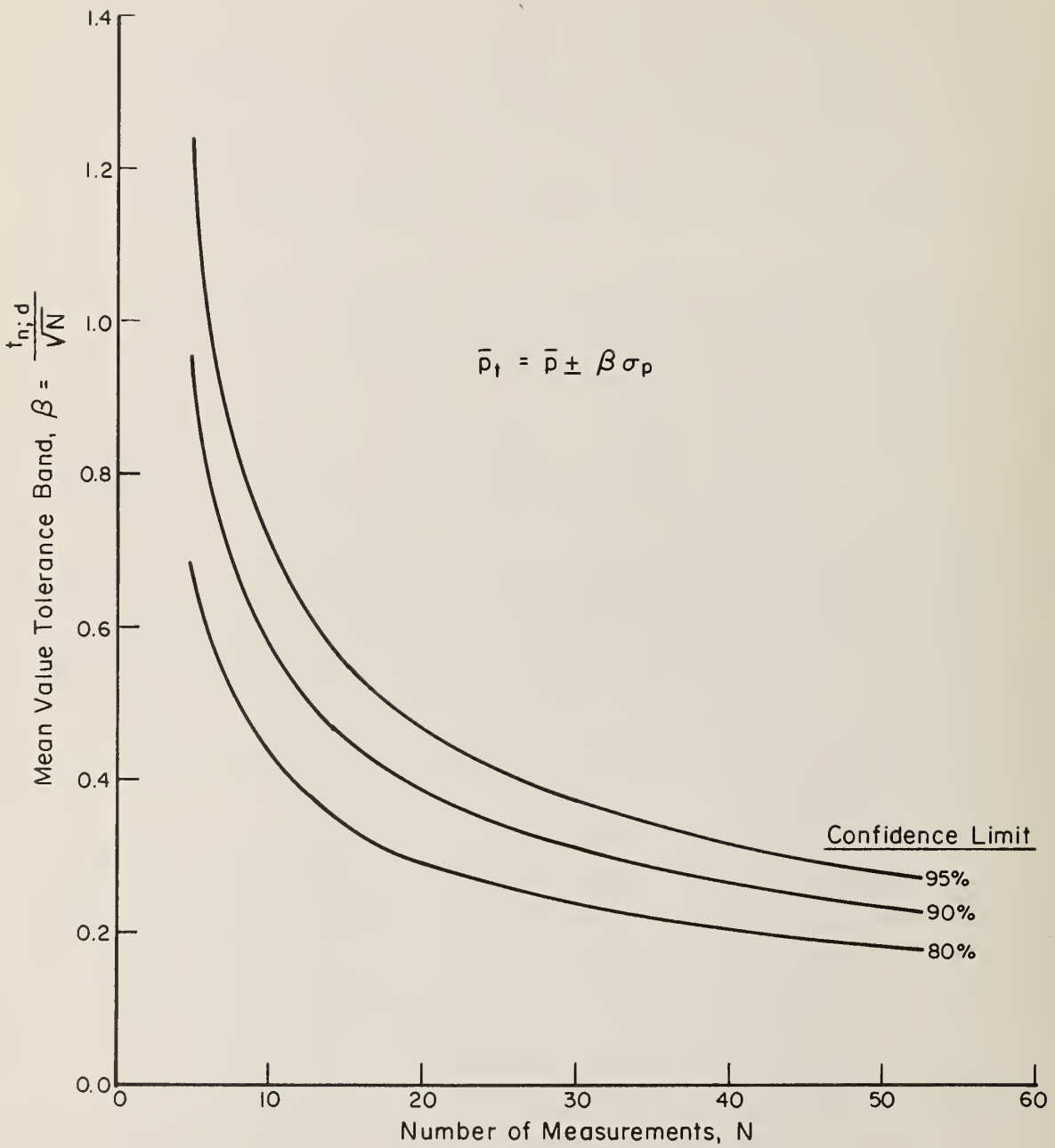

FIGURE A-1. STATISTICAL TOLERANCE BAND FOR ESTIMATING THE MEAN VALUE USING N MEASUREMENTS OF A RANDOM VARIABLE

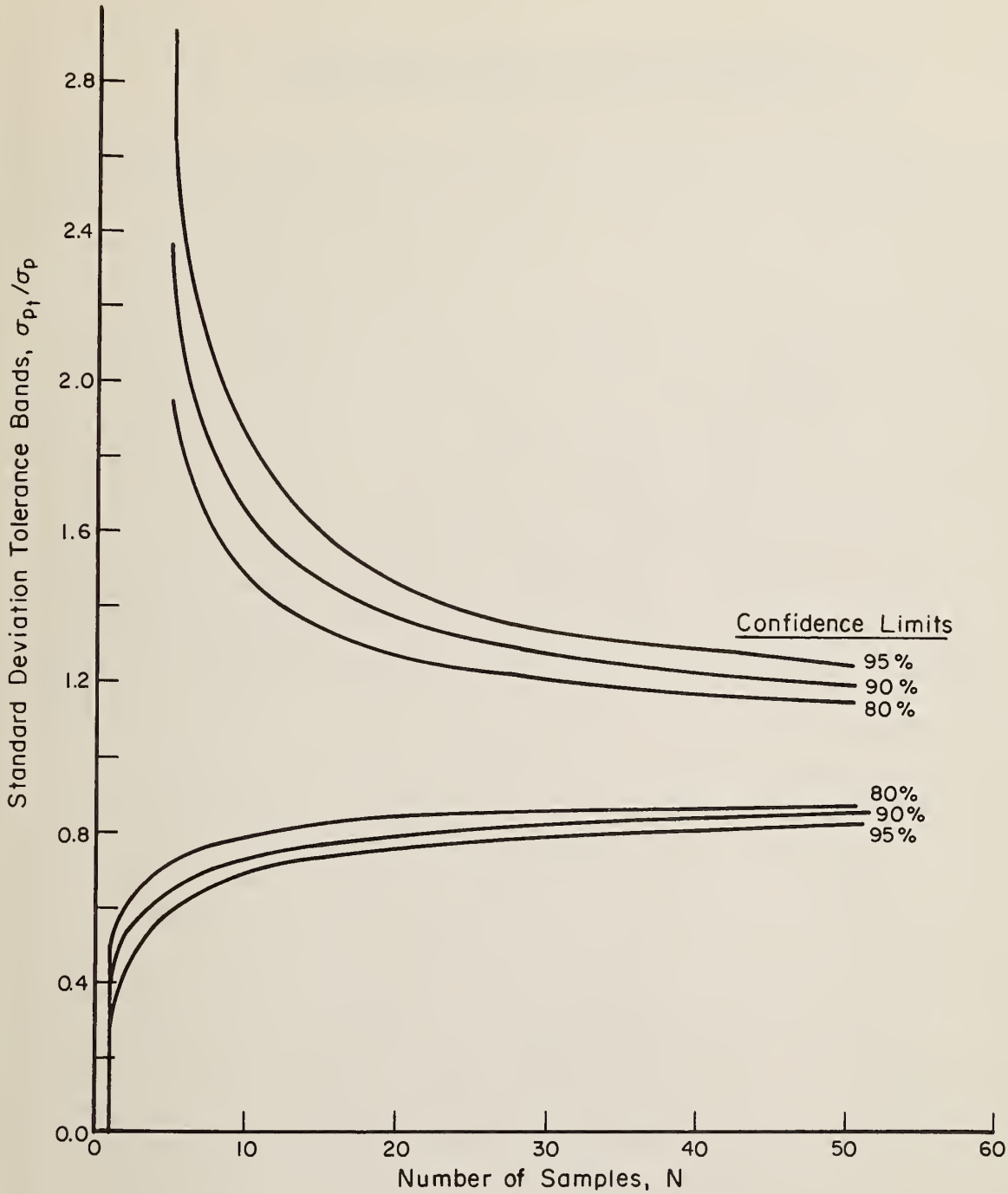

FIGURE A-2. STATISTICAL TOLERANCE BAND FOR ESTIMATING THE STANDARD DEVIATION OF A RANDOM VARIABLE

Probability Density and Distribution Analysis

The probability density function for the time history of a random variable is estimated by dividing the total amplitude range for the variable into a selected number of intervals. Then, the probability that the instantaneous value of the variable assumes an amplitude within a particular interval can be obtained from the ratio of the time spent in that interval to the total time duration of the record. This ratio approaches an exact probability description in the limit as the total record length, or number of data values, approaches infinity. The probability that the instantaneous value is less than or equal to some amplitude is given by the probability distribution function, which is equal to the integral of the probability density function from minus infinity to the specified amplitude.

The amplitude probability density analysis can be applied to a continuous signal. Particular sampled values of a continuous signal, such as a sequence of peak vertical tie plate loads where a single maximum load has been determined for each wheel pass, can also be analyzed. In this case, the load range would be divided into a number of load intervals and the number of data values, and percentage of data, in each interval would be calculated to give a probability density histogram. It is important to note that the mean value and standard deviation of a set of data values are unique quantities. However, the calculation of a probability density histogram is not unique because it depends on the load range W selected for each interval. It is also clear that the load intervals must be small enough to provide good resolution of the amplitude variations and that there should be sufficient data so that each interval has several entries to provide a reliable estimate.

The relations governing the statistical accuracy for estimating probability density functions are not well defined. However, Table A-1 gives some recommendations for the number of data points N required for K intervals (windows) [A-2]. These criteria are based on applying a Chi-Square goodness-of-fit test at a 5 percent ($\alpha = 0.05$) level of significance. The data in Table A-1 are given by the equation

$$K = 1.87\ (N-1)^{2/5}. \qquad \text{(A-6)}$$

TABLE A-1. RECOMMENDED NUMBER (K) OF INTERVALS FOR AMPLITUDE PROBABILITY DENSITY ANALYSIS OF SAMPLE SIZE N

Sample size, N	200	400	600	800	1000	1500	2000
No. of intervals	16	20	24	27	30	35	39

For an example calculation, assume that the mean value of peak vertical tie plate loads in a transit system is 6,000 pounds with a standard deviation of 1,200 pounds (20 percent of mean value). A total load range from 0 - 12,000 pounds should be adequate and a load interval of 500 pounds would give good resolution. This gives K = 12,000/500 = 24 windows. Table A-1 indicates that a minimum data sample from 600 wheel passes is recommended. Therefore, the time required for 150 transit cars to pass the measurement locations represents a minimum measurement interval for a particular data set. Also, the number of data points required for probability density analysis assures a very accurate estimate of the mean and standard deviation based on the relations in Figures A-1 and A-2.

REFERENCES

A-1. Bendat, Julius S., and Piersol, Allan G., "Measurement and Analysis of Random Data", John Wiley and Sons, New York, N. Y., 1966.

A-2. Williams, C. A., Jr., "On the Choice of the Number and Width of Classes for Chi-Square Test for Goodness of Fit", J. Am. Statistical Assoc., Vol. 45, March, 1950, pp 77-86.

APPENDIX B

DATA ANALYSIS REQUIREMENTS FOR FATIGUE

The process of fatigue in a structural component is a localized phenomenon which usually begins at a surface discontinuity, such as a hole or groove, where the stresses and strains induced by the combination of static and dynamic loads are greatest. If the service history is sufficiently severe, some of the dynamic load excursions within that history will cause localized inelastic deformations of the material. These inelastic deformations (or plastic strains) may temporarily alter the static stress distribution in the region of the discontinuity and may, in themselves, alter the response of the material to subsequent deformations. It is well established [B-1, B-2] that these plastic strains play a critical role in the accumulation of fatigue damage leading to component failure.

The development of an accurate fatigue life prediction for complex load histories therefore involves either (1) an experimental approach in which structural geometry and load history are duplicated as closely as possible so that local stresses and strains are implicitly included, or (2) an accurate analytical approach in which damage is accumulated theoretically based on a realistic description of the changing local stress-strain patterns in the critical region of the component.

Until recently, the analytical approach has been relatively unsuccessful for a variety of reasons. Numerous difficulties are involved in simply identifying significant cycles (load or strain excursions) in a complex history [B-3]. Many times the magnitude of each strain cycle is also in question since the structure may be sufficiently complex that it is difficult to identify the critical region, let alone measure strains accurately at that point. Understanding how damage should be accumulated is another complex and critical factor [B-4]. And most importantly, a thorough understanding of basic inelastic material behavior such as mechanical hysteresis, cyclic hardening and softening, and stress relaxation is necessary [B-5, B-6].

Because of these problems, experimental approaches have often been relied upon to give safe life estimates for critical components. In some cases [B-7] such as in the aircraft industry, entire structures have been tested under simulated service loadings. In other cases, critical components of larger structures have been subjected to loads and/or displacements considered to be representative of field service [B-8, B-9].

The dynamic component of these load-time histories is almost always variable in nature and a number of testing techniques have been devised to simulate these conditions in the laboratory. Three basically distinct approaches to load spectrum testing are commonly used [B-10]. The first, and simplest, is the programmed constant amplitude fatigue test in which the total field load specturm is subdivided into individual blocks of constant amplitude tests of relatively short duration. The service history is therefore simulated by a sequence of constant amplitude tests of varying intensity. This method is most familiar to test engineers. It has been used in the aircraft industry for a number of years, but it does have some serious shortcomings; the major one being the sequence effect. The resultant fatigue life is often greatly affected by the exact sequencing of the constant amplitude load blocks [B-11, B-12].

The second approach is the service duplication test in which a typical load history measured in service is applied to the laboratory specimen or component. This is a relatively new technique made possible by improved magnetic tape systems and high response servo-hydraulic test equipment [B-13]. On the surface, this method appears to be "the best test method possible", but there are disadvantages; test time and testing complexity being the major drawbacks. If the exact service history is reproduced on the component, it is natural to expect the laboratory component to last as long as the actual part being evaluated. The service history may be truncated at lower load levels or intensified overall to speed up the test, but the effect of these load history modifications is not always clear.

The third approach is called the random load spectrum test. In this type of testing the actual field load fluctuations are synthesized electronically by using band limited white noise. White noise is easily obtained from

a random function generator, and the synthesized signal is used to control the laboratory test system [B-14]. The spectrum test consists of a series of random vibrations at various levels of intensity within which the various root mean square (RMS) levels are individually randomized [B-8]. The random vibrations may be frequency filtered to simulate the dynamics, or power-spectral density (PSD) of the component loads [B-15]. Almost any field service load distribution can be simulated statistically in the laboratory by the selection of specific RMS levels [B-16, B-17]. This method has considerable potential in situations where the load histories are truly random in nature. Road-induced vibrations in ground vehicles have been found to display random character, and continuous measurements of wheel/rail forces should be similar.

Of the three experimental approaches, the second and third are considerably superior to the first. All three experimental approaches are undesirable from the standpoint of expense and lack of flexibility. Ideally, the laboratory evaluation of a component or structure should be performed only to verify the integrity of the design life predicted analytically. This has not been possible in the past, however, since there was insufficient knowledge concerning inelastic material behavior and its influence on the accumulation of fatigue damage in components subjected to complex load histories. Considerable research in the past few years has changed this picture. Advances have been made in the area of material characterization, complex history analysis, and notch analysis. Several investigators [B-18 thru B-20] have now incorporated these new approaches in computer-based fatigue analysis procedures that offer an effective analytical tool for component life prediction. These analytical approaches are far superior to any purely experimental approach if variations in component design or load history are to be evaluated because they are considerably less expensive and orders of magnitude faster. They also provide a more realistic estimate of the cummulative fatigue damage in an unfailed component subjected to a known load history for a specific time interval. Alternate materials may also be evaluated, assuming that each materials's inelastic stress-strain response under variable cyclic strains is known.

These analytical approaches are based on the concept that the critical region in the component may be viewed as though it were a smooth axial specimen [B-21, B-22]. The mechanical response of this region under the prescribed service loading can then be simulated in this artificial specimen, for which the basic stress-strain behavior under complex mechanical histories is known. This approach involves a determination of both local stress and strain, since it has been found that the combination of these two factors, rather than one or the other independently, is required for an accurate damage analysis. Other investigators have included the effects of material hardening and softening and cycle-dependent relaxation of mean stresses using computer simulations of the time-varying and history-dependent material response [B-19, B-23].

Significant cycles in the complex mechanical history are best identified by either the rain-flow [B-24] or range-pair [B-25] counting techniques. An example and explanation of cycle counting by the rain-flow method is given in [B-3] for the strain record shown in Figure B-1. When this procedure is applied to a strain history, a half cycle is counted between the most positive maximum and the most negative minimum. Assume that of these two, the most positive maximum occurs first. Half cycles are also counted between the most positive maximum and the most negative minimum that occurs before it in the history, between this minimum and the most positive maximum occurring previous to it, and so on to the beginning of the history. After the most negative minimum in the history, half cycles are counted which terminate at the most positive maximum occurring subsequently in the history, and this continues to the most negative minimum occurring after this maximum. This procedure is repeated to the end of the history.

The strain ranges counted as half cycles therefore increase in magnitude to the maximum and then decrease. All other strain excursions are counted as interruptions of these half cycles, or as interruptions of the interruptions, etc., and will always occur as pairs of equal magnitude to form full cycles. All strain ranges counted as cycles will form closed stress-strain hysteresis loops, and those counted as half cycles will not. The basic output from this counting procedure will be a sequenced listing of the mean value and stress range for each cycle identified in the strain record.

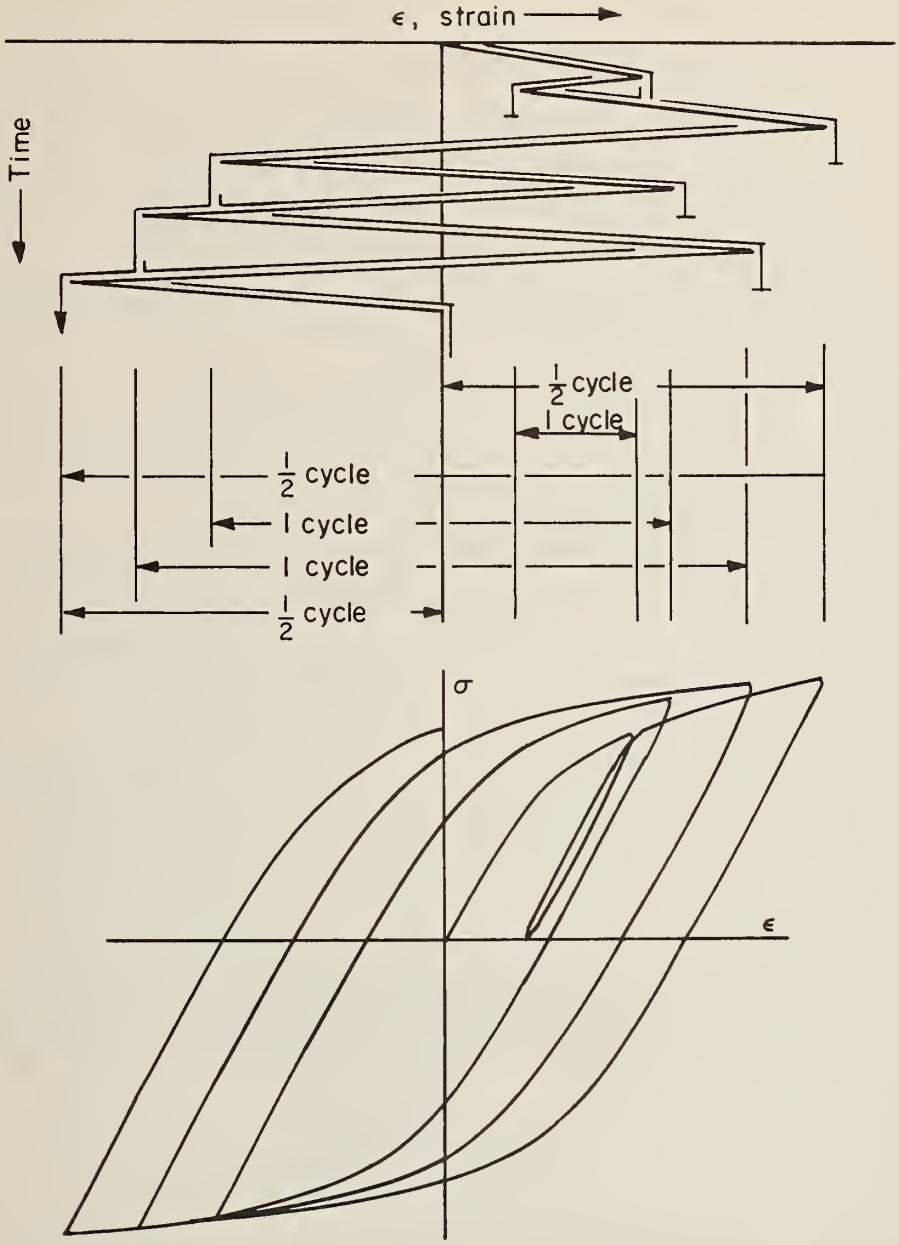

FIGURE B-1. EXAMPLE OF RAIN-FLOW CYCLE COUNTING METHOD [B-3]

The range pair method counts all the cycles counted by the rain-flow method, but some of the half cycles may be counted as full cycles, or not counted at all. Because of this difference, slightly less damage will always be accumulated by the range pair method. The difference is insignificant in all cases except those involving only a few very damaging cycles.

Although both methods accumulate damage in essentially the same fashion, the rain-flow method appears to be superior for several reasons. First, the rain-flow method has been computerized [B-26] so that a complex history can be evaluated with relative ease. Secondly, the rain-flow method corresponds directly to the cyclic stress-strain behavior of the material (Figure B-1), whereas the range-pair method does not.

Results of a computerized cumulative damage analysis employing rain-flow counting principles [B-18] are shown in Figure B-2. In all but a few cases the predicted failure life was within a factor of three of the actual life for both notched and unnotched specimens that were subjected to complex mechanical histories recorded on actual components in service.

The same series of specimens were also analyzed by several older and more common cycle counting techniques. The results of this work are shown in Figures B-3 and B-4 for the range count and histogram methods [B-27], respectively.

The difference in predictive capability of these two methods, as compared to the computerized rain-flow counting technique, is quite obvious. In a number of cases these methods predicted service lives that were in error by more than two orders of magnitude.

Summary

The service potential of track components such as a rail fastener or rail joint can be evaluated most accurately and efficiently through a combination of analytical and experimental work. A computer-based analytical approach employing inelastic stress-strain information and rain-flow counting principles should be used as the fundamental fatigue analysis tool. The analytical results should then be verified in selected cases by performing simulated service tests on actual components.

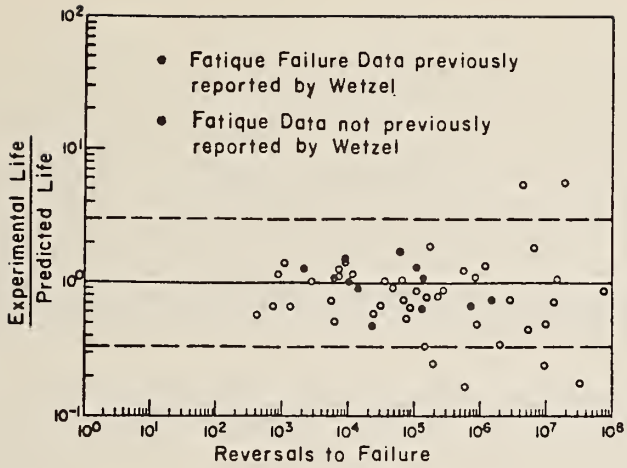

FIGURE B-2. RESULTS OF A COMPUTERIZED CUMULATIVE FATIGUE DAMAGE ANALYSIS EMPLOYING INELASTIC STRESS-STRAIN INFORMATION AND RAIN-FLOW COUNTING PRINCIPLES TO PREDICT FATIGUE FAILURE [B-18]

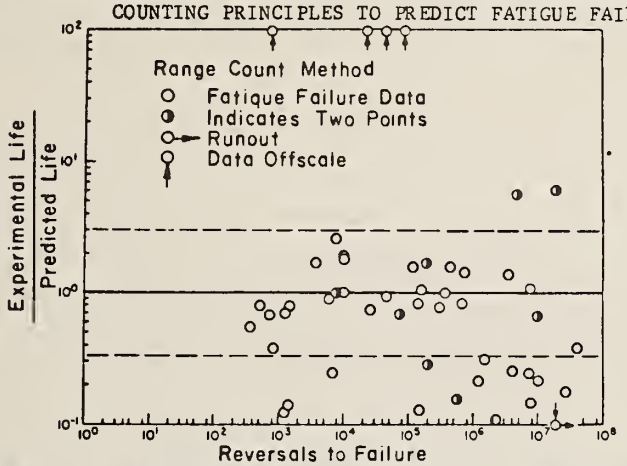

FIGURE B-3. RESULTS OF A CUMULATIVE FATIGUE DAMAGE ANALYSIS EMPLOYING A STRESS RANGE COUNTING METHOD [B-18]

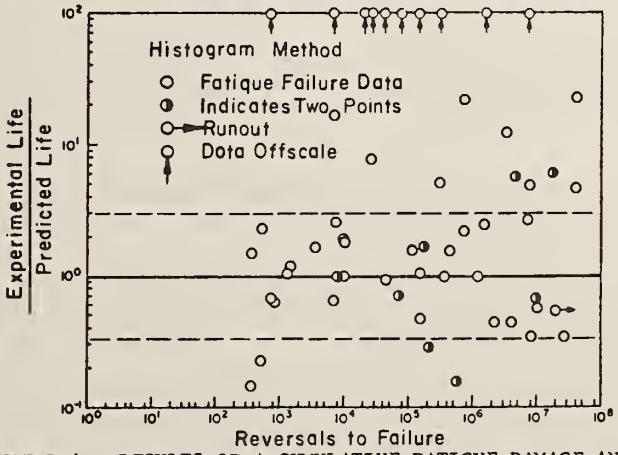

FIGURE B-4. RESULTS OF A CUMULATIVE FATIGUE DAMAGE ANALYSIS EMPLOYING A STRESS HISTOGRAM METHOD [B-18]

A strain-time history taken in the critical region of the component under typical service conditions is the most useful type of data for fatigue analysis. If these data are not available, strain or load-time records developed in locations near the critical region may be used to estimate local stresses and strains. Recordings of load or displacement of the fastener or rail joint may be duplicated or synthesized to provide input for experimental evaluations.

REFERENCES

B-1. Landgraf, R. W., and Wetzel, R. M., "Cyclic Deformation and Fatigue Damage", presented at International Conference on Mechanical Behavior of Materials, Kyoto, Japan, August, 1971.

B-2. Grosskrentz, J. C., "Fatigue Mechanisms in the Sub-Creep Range", Metal Fatigue Damage-Mechanism, Detection, Avoidance, and Repair, ASTM, STP 495, pp 5-60, 1971.

B-3. Dowling, N. E., "Fatigue Failure Predictions for Complicated Stress-Strain Histories", Journal of Materials, ASTM, Vol. 3, No. 3, pp. 646-657, September, 1968.

B-4. Landgraf, R. W., "Cumulative Fatigue Damage Under Complex Strain Histories", Cyclic Stress-Strain Behavior Analysis, Experimentation and Prediction, ASTM, STP 519, American Society for Testing and Materials, pp. 213-228, 1973.

B-5. Dolan, T. J., Proceedings of 9th Midwestern Mechanics Conference, Madison, Wisconsin, pp. 3-21, 1965.

B-6. Krempl, E., Journal of Basic Engineering, Transactions American Society of Mechanical Engineers, Vol. 93, Series D, p 317, 1971.

B-7. Bryan, David F., "The B-52G-H Wing Cyclic Test Program", paper presented at the Air Force Conference on Fatigue and Fracture of Aircraft Structures and Materials, Miami Beach, Florida, December, 1969.

B-8. Jaeckel, H. R., and Swanson, S. W., "Random Load Spectrum Test to Determine Durability of Structural Components of Automotive Vehicles", 12th International Automobile Technical Congress, FISITA, Barcelona, Spain, 1968; also SAE Journal, p. 42, November, 1969.

B-9. Olberts, D. R., and Tucker, L. E., "Field Testing of Components", Gray, Ductile, and Malleable Iron Castings-Current Capabilities, ASTM STP 455, American Society for Testing and Materials, Philadelphia, pp 78-86, 1969.

B-10. Jaeckel, H. R., "Fatigue Load History Simulation, Duplication, and Synthesis", Sound and Vibration, pp 18-29, March, 1970.

B-11. Freudenthal, A. M., Heller, R. A., and O'Loary, P. J., "Cumulative Fatigue Damage of Aircraft Structural Materials, Part 1 - 2024 and 7075 Aluminum Alloy", WADC TN 55-273, Pt. 1, June, 1955.

B-12. Freudenthal, A. M., and Heller, R. A., "On Stress Interaction and a Cumulative Damage Rule", Journal of Aerospace Sciences, July, 1959.

B-13. Barrowcliff, B. K., and Ehlert, R. E., "Full Scale Road Simulated Endurance Test", paper 680148 presented at SAE Automotive Engineering Congress, Detroit, Michigan, January, 1968.

B-14. Swanson, S. R., "Random Load Fatigue Testing: A State of the Art Survey", ASTM Materials Research Standards, Vol. 8, No. 4, April, 1968.

B-15. Bussa, S. L., Sheth, N. J., and Swanson, S. R., "Development of a Random Load Life Prediction Model", Component Test and Development Report No. 70-2204, Ford Motor Co., Deerborn, Michigan, May, 1970.

B-16 Leybold, H. A., "Techniques for Examining Statistical and Power-Spectral Properties of Random Time Histories, NASA TN D-2714, National Aeronautics and Space Administration, Washington, D. C., March, 1965.

B-17. Akaike, H., "Load History Effects in Structural Fatigue", Proceedings of the 1969 Annual Meeting, Institute of Environmental Sciences, Anaheim, California, April, 1969.

B-18. Wetzel, R. M., "A Method of Fatigue Damage Analysis", Ph.D. Thesis, Department of Civil Engineering, University of Waterloo, Ontario, Canada, 1971. Also see Scientific Research Report No. SR71-107, Scientific Research Staff, Ford Motor Company, Deerborn, Michigan, September, 1971.

B-19. Martin, J. F., Topper, T. H., and Sinclair, G. M., "Computer Based Simulation of Cyclic Stress-Strain Behavior with Applications to Fatigue", Materials Research and Standards, MTRSA, Vol. 11, No. 2, p 23-28, February, 1971.

B-20. Stadnick, S. J., and Morrow, J., "Techniques for Smooth Specimen Simulation for the Fatigue Behavior of Notched Members", Testing for Prediction of Material Performance in Structures and Components, ASTM STP 515, pp. 229-252, 1972.

B-21. Wetzel, R. M., "Smooth Specimen Simulation of the Fatigue Behavior of Notches", Journal of Materials, Vol. 3, No. 3, pp. 646-657, September, 1968.

B-22. Topper, T. H., and Morrow, J., "Simulation of the Fatigue Behavior at the Notch Root in Spectrum Loaded Notched Members", T.& A. M. Report No. 333, Department of Theoretical and Applied Mechanics, University of Illinois, Urbana, Illinois, January, 1970.

B-23. Jhansak, H. R., and Topper, T. H., "Engineering Analysis of the Inelastic Stress Response of a Structural Metal Under Variable Cyclic Strains", Cyclic Stress-Strain Behavior, ASTM STP 519, pp. 246-270, 1973.

B-24. Matsuishi, M., and Endo, T., "Fatigue of Metals Subjected to Varying Stress", paper presented at Japan Society of Mechanical Engineers, Fukuoka, Japan, March, 1968.

B-25. Schijve, J., "Analysis of Random Load-Time Histories with Relation to Fatigue Tests and Life Calculations", Fatigue of Aircraft Structures, ed. by W. Barrios & E. L. Ripley, Pergamon Press, pp 115-148, 1963.

B-26. Richards, F. D., and Lapointe, N. R., "A Cycle Counting Algorithm for Fatigue Damage Analysis", paper 740278 presented at SAE Automotive Engineering Confress, Detroit, Michigan, March, 1974.

B-27. Jacoby, G. H., "Fatigue Life Estimation Processes Under Conditions of Irregularly Varying Loads", AFML TR 67-214, Air Force Materials Lab, Wright-Patterson AFB, Ohio, August, 1967.

APPENDIX C

DATA PROCESSING REQUIREMENTS

The processing and analysis of the data collected during a single test session lasting 24 hours or longer is an extensive task. The general procedures for this task are discussed in this section, but specific details will depend on the particular facilities that are used for the processing. It is also recognized that the selection of data and the techniques for analyzing specific measurement parameters may change considerably based on experience from the first test session.

A flow chart showing the major steps in a typical data processing sequence is shown in Figure C-1. The data from all channels of the analog tape generated during the test session would first be reproduced on a high-speed oscillograph. The detailed test log and visual inspection of these records would be used to eliminate any invalid data and to select specific data for special analyses or to obtain a consistent set of time history recordings. Generally, large quantities of data can best be handled by converting the information into digital form for storage and further processing. If this technique is adopted, initial conversion of the data requires digital sampling at rates from 2 to 5 times faster than the highest frequency data. This is especially important for determining accurate power spectral density (PSD) estimates.

Peak values can be determined using sample and hold amplifiers gated by the wheel detector pulse or by analysis of the digitized data. The digital sampling can also be gated by the wheel detector pulse to minimize storage requirements and processing time.

Minicomputer systems can handle the initial portions of the A/D conversion and processing, including the generation of a digital data tape which contains only the essential data necessary for final analysis on a larger capacity computer. Under software control, this tape would provide a train identification code, a total axle count for subsequent checking, and train speed based on the time interval between wheel detection pulses.

The initial processing done at the main computer facility* would

---

* The use of smaller digital computer systems that have special software systems for performing statistical analyses of data signals is an acceptable alternative to using a larger, general-purpose digital computer facility.

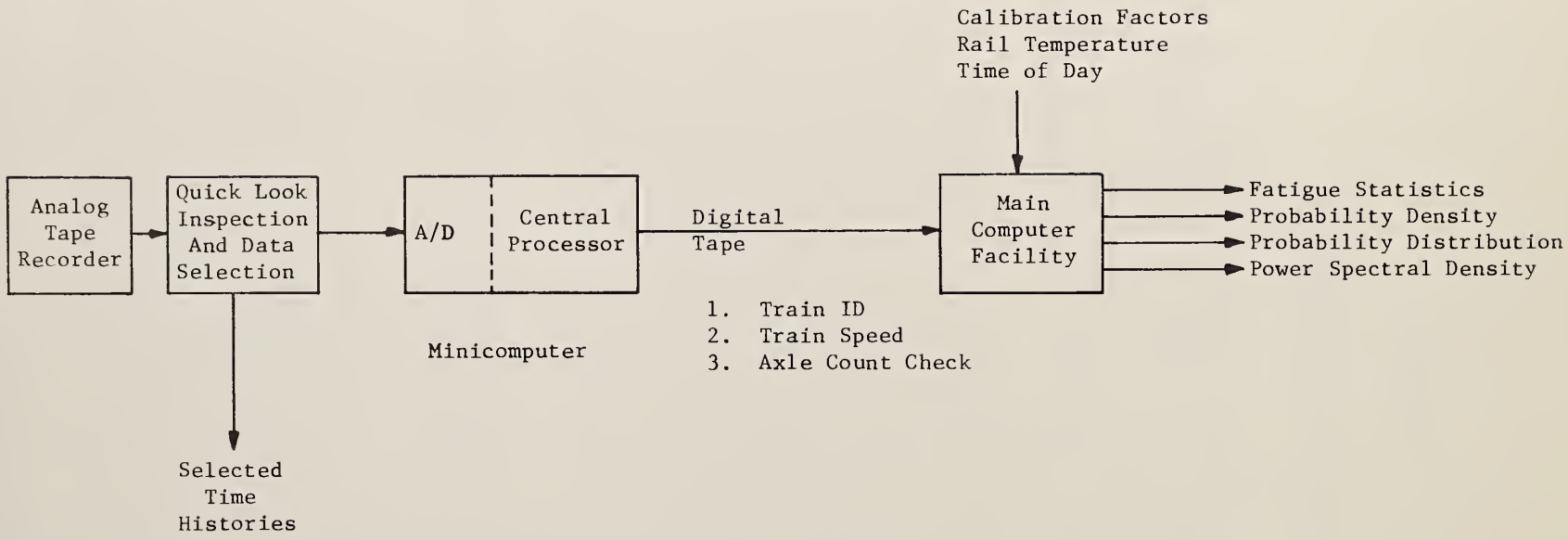

FIGURE C-1. FLOW DIAGRAM FOR A TYPICAL DATA PROCESSING SEQUENCE

be to convert the data to engineering units using instrumentation calibration factors. The data records for each train can be identified further by additional data collected such as rail temperature, time of day, etc.

Conversion accuracy of the A/D converter can be as low as 8 bits plus sign without affecting the results, although most systems have 10 bit accuracies as a minimum. Through put rates and buffer sizes will only be reflected in terms of total time, manpower, and machine costs such that a faster, larger minicomputer system will expedite the processing and therefore minimize program costs. However, if sampling rates fall below "real time" requirements, the capability to reduce analog playback speeds will be necessary. Through put must include sample rates times number of channels sampled per pass. Generally, if more than one sample rate is required for separate channels, the data channels with common sample rates can be processed together.

APPENDIX D

DATA ACQUISITION SYSTEM

The collection of reliable data requires a data acquisition system in which the following subsystems are integrated effectively:

(1) Measurement transducers
(2) Signal conditioning
(3) Data transmission
(4) Data Recording
(5) Time Correlation
(6) Data verification

Figures D-1 and D-2 illustrate two different data acquisition systems which would be satisfactory for fastener and rail joint measurement programs. The fundamental differences between the two systems are the format in which the data are transmitted from the test site to the test trailer or van and the particular technique used to record the data. The transducers and the signal conditioning are essentially the same for either system, and the magnetic tape recorder(s) are of similar construction.

The system illustrated in Figure D-1 is a discrete channel recording system and requires more cabling and more recorders than the multiplexed system in Figure D-2. The multiplexed data system is a more complex concept, but it has been used successfully for many similar applications. With approximately 50 data channels required for the rail joint test program, the FM multiplex system would have a cost advantage if the purchase of a complete data acquisition system is necessary. With approximately 20 data channels required for the rail fastener test program, the discrete channel system would have the cost advantage. Technically, the two systems will produce equal quality data, so the choice depends on equipment availabilities and cost.

The overall design goals for the data acquisition system should include:

(1) Maximum data band width: d-c to 2KHz, flat within ± 5 percent for the rail joint program
d-c to 500 Hz, flat within ± 5 percent for the rail fastener program

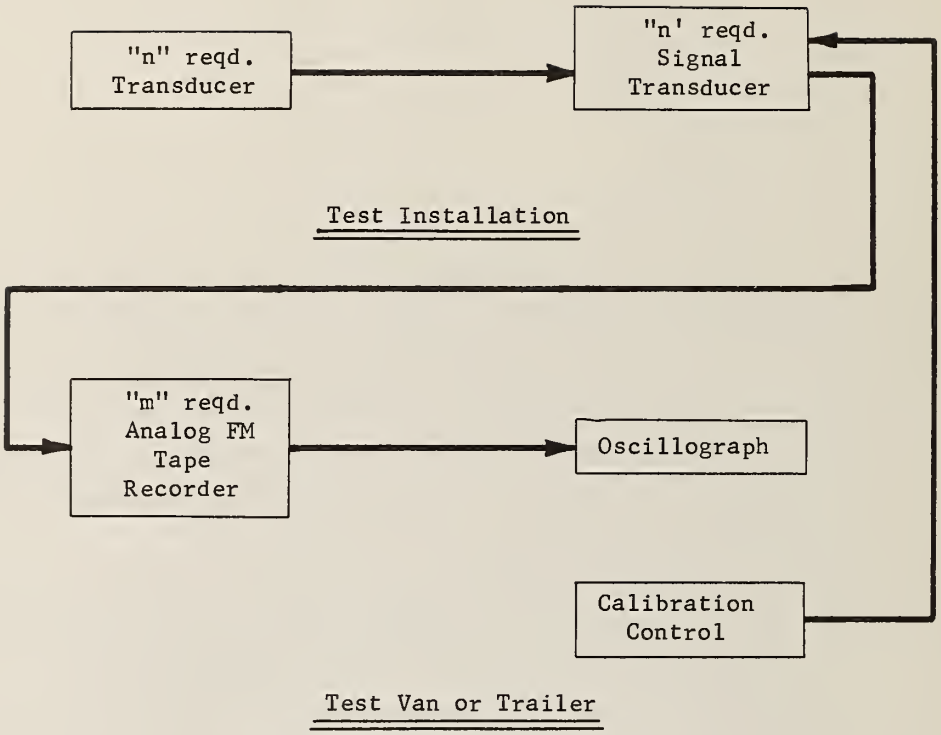

n = total number of data channels.

m = total number of tape recorders with $\frac{n}{m} \leq$ the number tracks available on one recorder.

FIGURE D-1. BASIC DISCRETE CHANNEL DATA ACQUISITION SYSTEM

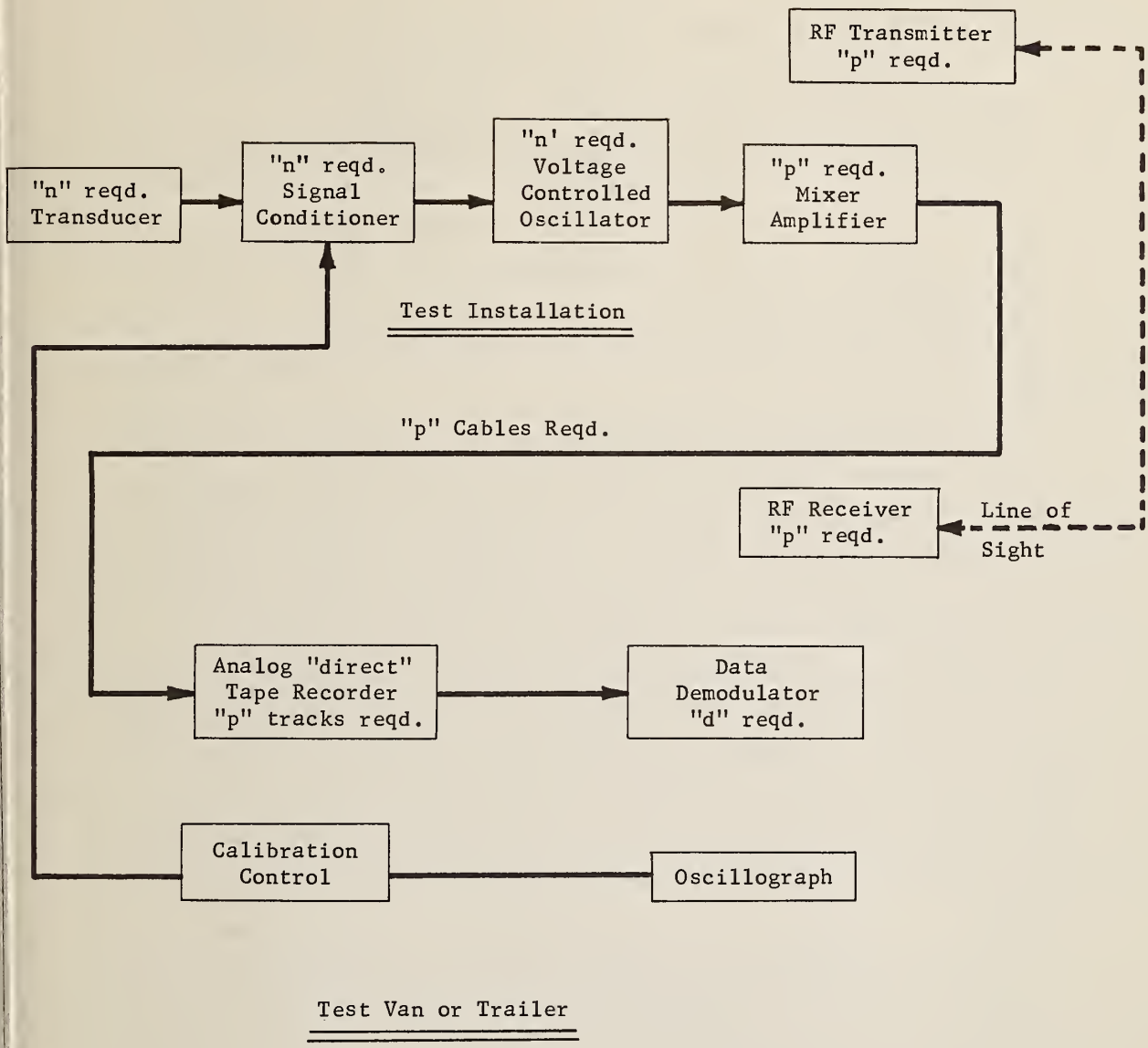

n = total number of data channels.

d = number of data channels on one data multiplex.

p = total number of data multiplexes with $p \geq \frac{n}{d}$.

FIGURE D-2. MULTIPLEXED DATA ACQUISITION SYSTEM

(2) Signal-to-noise ratio: 40 dB (noise is about 1 percent of full scale)

(3) d-c nonlinearity and hysteresis: ± 0.5 percent

(4) Channel capacity: approximately 50 channels for the rail joint program
approximately 20 channels for the rail fastener program

(5) Capability of operation in severe environments.

These factors will be discussed in greater detail within the appropriate following sections.

It is anticipated that safeguards against electromagnetic interference (EMI) and radio frequency interference (RFI) may be important requirements for the data system design. Traction power return currents on the order of 1000 amperes in the rails will produce relatively large magnetic fields. This EMI can excite single strain gages in a self-generating mode very effectively by producing an output voltage component independent of resistance change or bridge excitation. Although the traction power is d-c, the current in the rail beneath a powered wheel will appear as a transient as the wheel passes the gage installation, and this transient may induce an output from the strain gage. Isolating or shunting the return currents away from the gaged region will improve the signal-to-noise (S/N) ratio. In any case, a test should be performed to establish the magnitude of the problem prior to the completion of the final data system design.

RFI can be generated by the arcing of the third rail contact and motor brushes (if used). The common mode rejection capability of the input amplifiers is an important factor in overcoming this source of interference. Careful attention to grounding and shielding is also important for this type of noise. The severity of this potential noise problem should be evaluated before the data acquisition system design is finalized.

Signal Conditioning

The lists of measurement parameters and transducers given in Tables 3-3 and 3-7 show that the two types of transducers recommended are low-level output

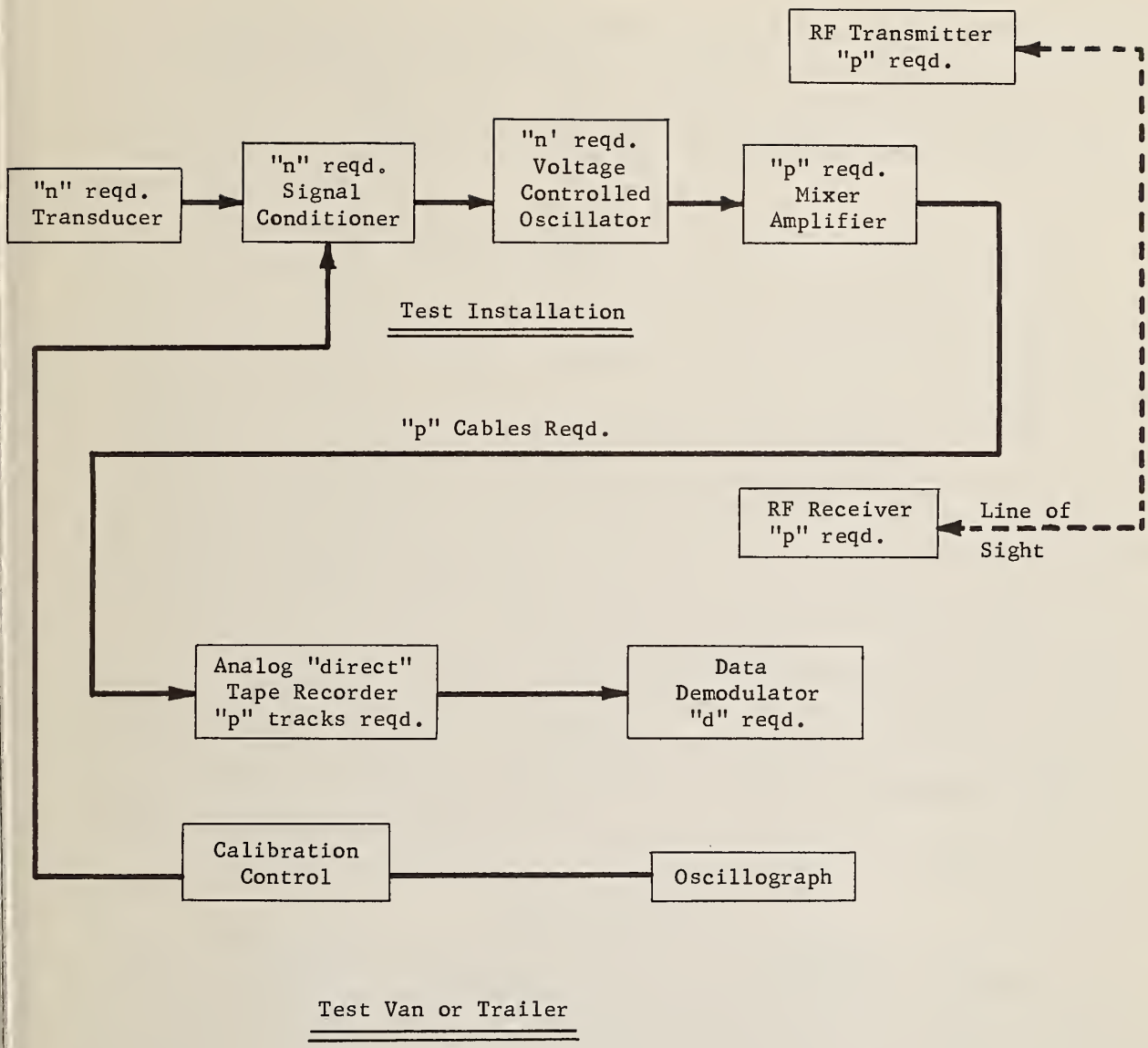

n = total number of data channels.

d = number of data channels on one data multiplex.

p = total number of data multiplexes with $p \geq \frac{n}{d}$.

FIGURE D-2. MULTIPLEXED DATA ACQUISITION SYSTEM

(2) Signal-to-noise ratio: 40 dB (noise is about 1 percent of full scale)

(3) d-c nonlinearity and hysteresis: ± 0.5 percent

(4) Channel capacity: approximately 50 channels for the rail joint program
approximately 20 channels for the rail fastener program

(5) Capability of operation in severe environments.

These factors will be discussed in greater detail within the appropriate following sections.

It is anticipated that safeguards against electromagnetic interference (EMI) and radio frequency interference (RFI) may be important requirements for the data system design. Traction power return currents on the order of 1000 amperes in the rails will produce relatively large magnetic fields. This EMI can excite single strain gages in a self-generating mode very effectively by producing an output voltage component independent of resistance change or bridge excitation. Although the traction power is d-c, the current in the rail beneath a powered wheel will appear as a transient as the wheel passes the gage installation, and this transient may induce an output from the strain gage. Isolating or shunting the return currents away from the gaged region will improve the signal-to-noise (S/N) ratio. In any case, a test should be performed to establish the magnitude of the problem prior to the completion of the final data system design.

RFI can be generated by the arcing of the third rail contact and motor brushes (if used). The common mode rejection capability of the input amplifiers is an important factor in overcoming this source of interference. Careful attention to grounding and shielding is also important for this type of noise. The severity of this potential noise problem should be evaluated before the data acquisition system design is finalized.

Signal Conditioning

The lists of measurement parameters and transducers given in Tables 3-3 and 3-7 show that the two types of transducers recommended are low-level output

strain gages and high-level output DCDT's. Standard signal conditioning for strain gage transducers transforms the output to a high-level signal comparable to that from a DCDT. Thus, any signal transmission and recording system will be driven by high-level (1 to 10-volt range) signals, which will maximize signal-to-noise ratios.

To further maximize S/N ratios, it is recommended that signal conditioning amplifiers and related equipment designed for severe environments be used so that they can be installed close to the test installation (within 10 to 15 ft). This will reduce the length of cabling between the transducers and amplifiers compared to using conventional equipment which is restricted to instrument vans or trailers that may be located several hundred feet from the test site. An additional advantage for ruggedized signal conditioning is its superior temperature stability and typically better common mode rejection. Inherent protection from high common mode voltages should also be considered. Strain gage amplifiers should have gains between 10 and 1000 and gains as high as 3000 should be considered. Bridge excitation should be fully isolated.

It may be advantageous to use signal conditioners for the DCDT's to provide variable gain throughout the total degradation cycle of the rail joint. This would permit the use of a single DCDT for the whole range; for example, a DCDT with a 1.0-in range can be amplified to resolve 0.10-in full scale displacements when the rail joint is new.

Data Transmission

As discussed previously, the method for transmitting data from the test section to the instrument van or trailer should be selected together with the recording technique and the signal conditioning system. The use of local signal conditioning at the test site reduces the long cabling to one power cable (low current level), an assortment of multiple signal cables, and perhaps a separate control cable for special operations such as calibration, etc. Cabling costs, which are rising rapidly due to vinyl shortages and increases in the cost of copper, and system noise can be reduced considerably by this approach. Data multiplexing (by frequency division using FM subcarriers) at the test site would also reduce the cable requirements by carrying several channels on one pair of wires.

RF telemetry can further improve the flexibility of the data acquisition system. This is not a prerequisite for a good data acquisition system, but it does offer several advantages. These include:

- Increased flexibility for test site selection and the location of the test van or trailer (except for poor line-of-sight situations).
- Data transmission is in a multiplexed form which greatly increases the cost effectiveness of the recording system when recording a large number of data channels.
- The capability for totally remote operation of the test site (with the aid of batteries or local power source).

Data Recording

It is recommended that analog recording techniques be used in both test programs, and conventional IRIG Intermediate Band magnetic tape recorders are probably the best choice.

Depending on the final choice of data acquisition system concepts which were illustrated in Figures D-1 and D-2, one of the following recorder configuration should be used.

(1) The discrete channel data system, Figure D-1, will require recording each data channel on a separate tape track using FM recording techniques. This would require 4 or 5 separate 14-track (1-in) FM tape recorders for the rail joint program and 2 recorders for the rail fastener program to acquire all data simultaneously. It would also require time correlation and/or the wheel position indicator signal to be recorded on a separate track of each recorder to synchronize data during the processing stage. Recommended tape speed is 7-1/2 inches per second (ips) for the rail joint tests and 3-3/4 ips for the rail fastener tests.

(2) The multiplexed data system, Figure D-2, will require recording previously multiplexed data channels (performed at the test site), on each track of tape. Each multiplex channel may contain up to 7 data channels with

2KHz data bandwidths. This approach would require only one tape recorder operating in a "direct" record mode. Time correlation would require a separate FM tape track for data processing. Recommended tape speed is 60 ips.

Time Correlation of Events

Whether multiple recorders or data multiplexing is used, it will be necessary to provide a time reference and event synchronization for data processing. Two approaches are suggested: (1) the signal from a timing oscillator can be recorded on a separate channel of each tape recorder so it can be correlated with the wheel detector pulse. The wheel pulse signal must be recorded in a similar manner so that both are available for every pass of the tape during processing. During processing, the computer would keep track of the total number and sequence of wheel pulses; (2) a time code generator signal would be recorded in the same manner as the timing oscillator. The time code identifies time of day resolved to the nearest millisecond or greater, depending on the particular code used.

The first approach is adaptable to computer software which would be generated specifically for this program. Because the wheel position is already required, it may be easier to apply this technique. The second approach will require the purchase and checkout of a time code generator and reader in addition to the wheel detector. Technically, the performance of the two systems should be comparable, but the first approach may be less expensive.

Data Verification

The on-site capability for making "quick look" inspection of all data signals to verify recording quality and proper scaling of parameters is a necessity. It is not necessary to observe all channels simultaneously or to acquire them in "real-time"; however, the importance of this field inspection cannot be overlooked in safeguarding the success of the total program.

A light beam oscillograph is a convenient device for making these inspections. An oscilloscope can also be of assistance, but it should not be used as the primary monitor. If a multiplexed data system is used for this program, a set of data demodulators will be required on site to convert the data back into analog form for display. It is quite important that the data be examined after it has been processed through the magnetic tape recorder to provide a total check on the data collection.

Automatic Data Recording

Depending on the final selection of a test site, it may be highly desirable to have an automatic control system to start and stop the data recorders for each train pass. The warning time before a train arrives may not be sufficient to effectively control all the recording functions in a manual mode. Tapping the signal block control lines (this would be done by the transit authority's signal maintainer) can provide a signal for a warning device for manual data recording or to activate an automatic system. Alternatively, it may be more convenient to install wheel detectors just outside the test section to start the data system so the timing could be adjusted to match the startup time for the recorders.

An additional advantage of the automatic system is the highly repeatable sequence that it presents on the analog tape, i.e., the data processing phase can become much more automated when "human error" is minimized during the recording phase. This would be especially important if multiple tape recorders are used simultaneously.

APPENDIX E

REPORT OF INVENTIONS

This report contains a comprehensive review of reported work on track measurements to establish the data requirements for evaluating rail fasteners and bolted rail joints. After a diligent review of the work performed under this contract, no new inventions, discoveries, or improvements of inventions were made.